L78M00 SERIES

POSITIVE VOLTAGE REGULATORS

- OUTPUT CURRENT TO 0.5A
- OUTPUT VOLTAGES OF 5; 6; 8; 9; 12; 15; 18; 20; 24V
- THERMAL OVERLOAD PROTECTION
- SHORT CIRCUIT PROTECTION
- OUTPUT TRANSITION SOA PROTECTION

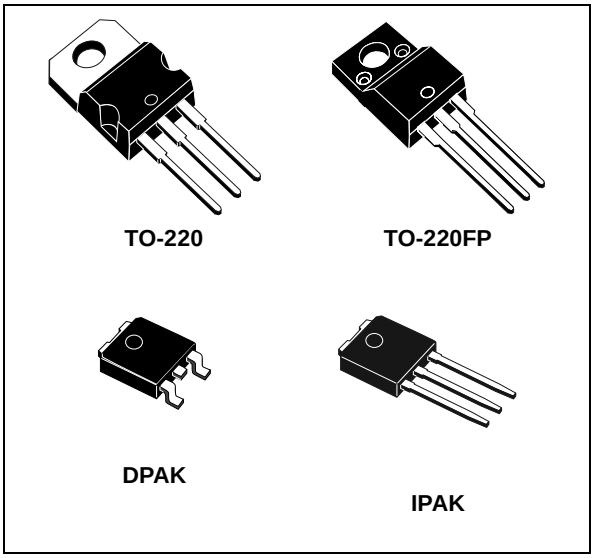

DESCRIPTION

The L78M00 series of three-terminal positive regulators is available in TO-220, TO-220FP, DPAK and IPAK packages and with several fixed output voltages, making it useful in a wide range of applications. These regulators can provide local on-card regulation, eliminating the distribution problems associated with single point regulation. Each type employs internal current limiting, thermal shut-down and safe area protection, making it essentially indestructible. If adequate heat sinking is provided, they can deliver over 0.5A output current. Although designed primarily as fixed voltage regulators, these devices can be used with external components to obtain adjustable voltage and currents.

SCHEMATIC DIAGRAM

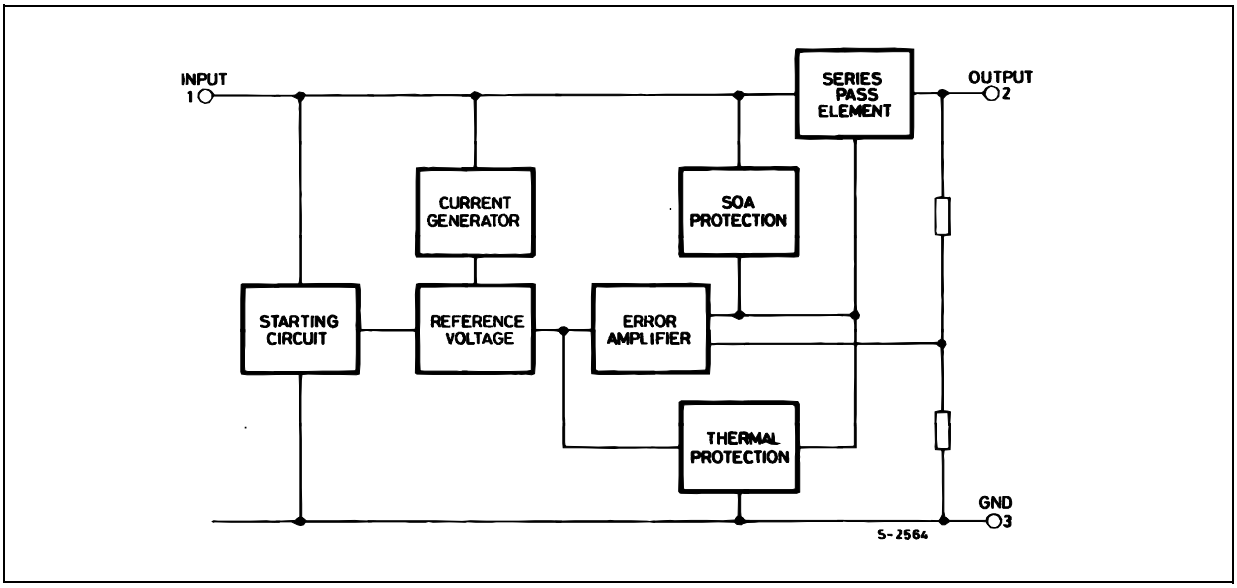

ABSOLUTE MAXIMUM RATINGS

Symbol	Parameter	Value	Unit
V_I	DC Input Voltage (for V_O= 5 to 18V) (for V_O= 20, 24V)	35 40	V V
I_O	Output Current	Internally Limited	mA
P_D	Power Dissipation	Internally Limited	mW
T_{stg}	Storage Temperature Range	-65 to +150	°C
T_{op}	Operating Junction Temperature Range	0 to +150	°C

Absolute Maximum Ratings are those values beyond which damage to the device may occur. Functional operation under these condition is not implied.

THERMAL DATA

Symbol	Parameter	TO-220	TO-220FP	DPAK	IPAK	Unit
$R_{thj-case}$	Thermal Resistance Junction-case	3	5	8		°C/W
$R_{thj-amb}$	Thermal Resistance Junction-ambient	50	60	100		°C/W

SHEMATIC DIAGRAM

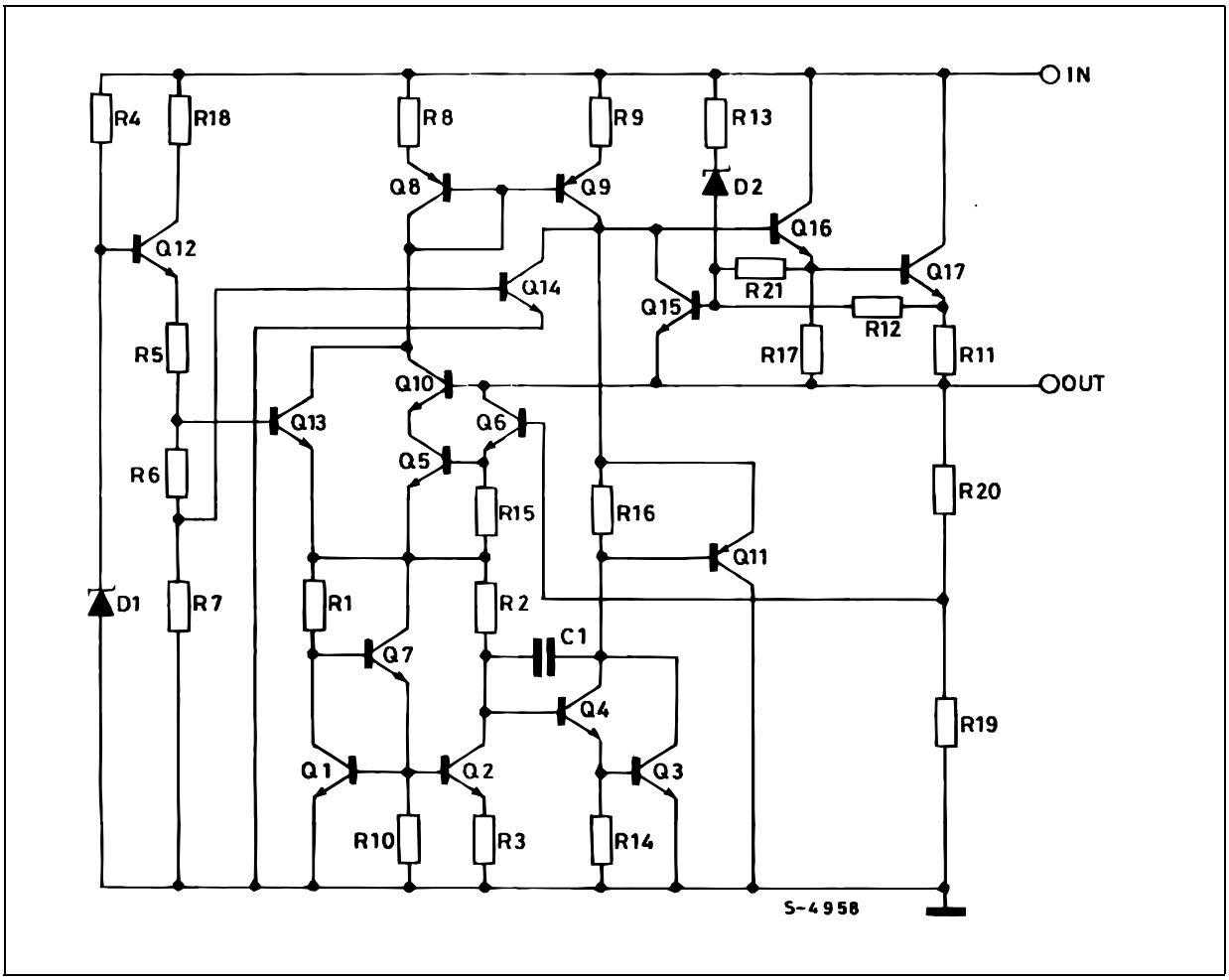

CONNECTION DIAGRAM (top view)

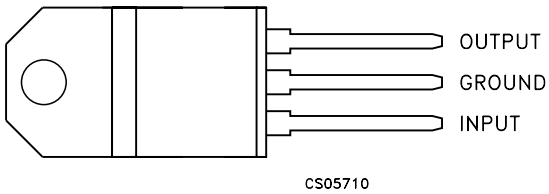

TO-220

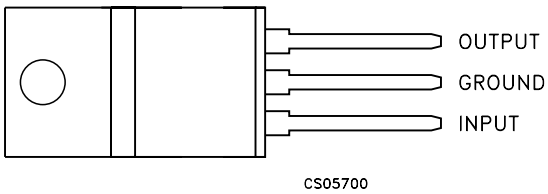

TO-220FP

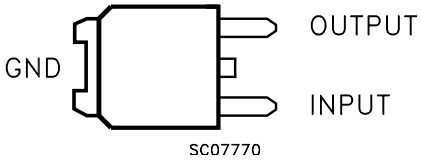

DPAK

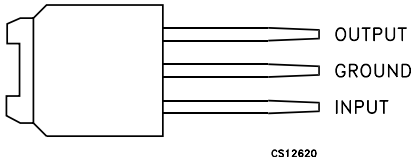

IPAK

ORDERING CODES

TYPE	TO-220	TO-220FP	DPAK (*)	IPAK	OUTPUT VOLTAGE
L78M05	L78M05CV	L78M05CP	L78M05CDT	L78M05CDT-1	5 V
L78M06	L78M06CV	L78M06CP	L78M06CDT	L78M06CDT-1	6 V
L78M08	L78M08CV	L78M08CP	L78M08CDT	L78M08CDT-1	8 V
L78M09	L78M09CV	L78M09CP	L78M09CDT	L78M09CDT-1	9 V
L78M10	L78M10CV	L78M10CP	L78M10CDT	L78M10CDT-1	10 V
L78M12	L78M12CV	L78M12CP	L78M12CDT	L78M12CDT-1	12 V
L78M15	L78M15CV	L78M15CP	L78M15CDT	L78M15CDT-1	15 V
L78M18	L78M18CV	L78M18CP	L78M18CDT	L78M18CDT-1	18 V
L78M20	L78M20CV	L78M20CP	L78M20CDT	L78M20CDT-1	20 V
L78M24	L78M24CV	L78M24CP	L78M24CDT	L78M24CDT-1	24 V

(*) Available in Tape & Reel with the suffix "-TR".

APPLICATION CIRCUITS

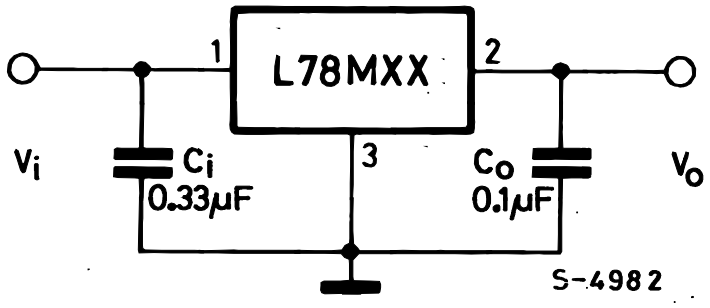

TEST CIRCUITS

Figure 1 : DC Parameter

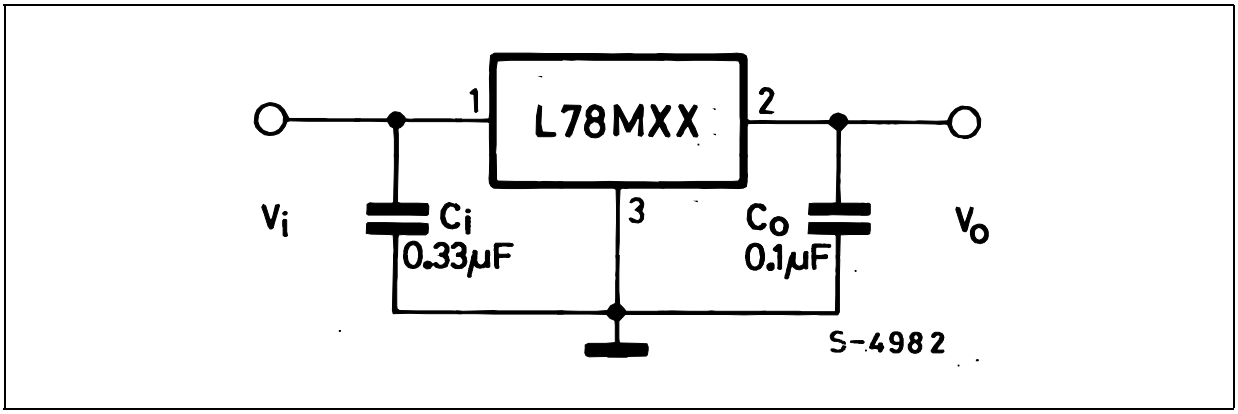

Figure 2 : Load Regulation

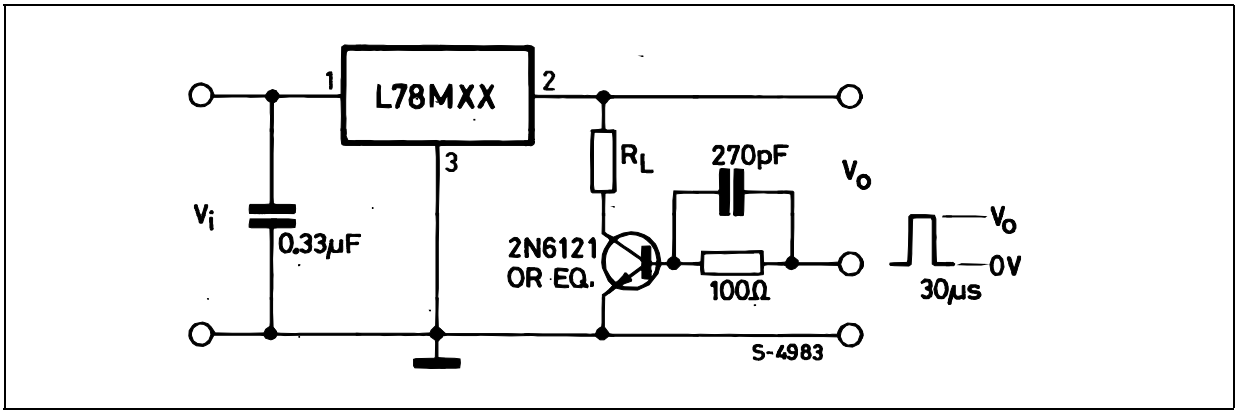

Figure 3 : Ripple Rejection

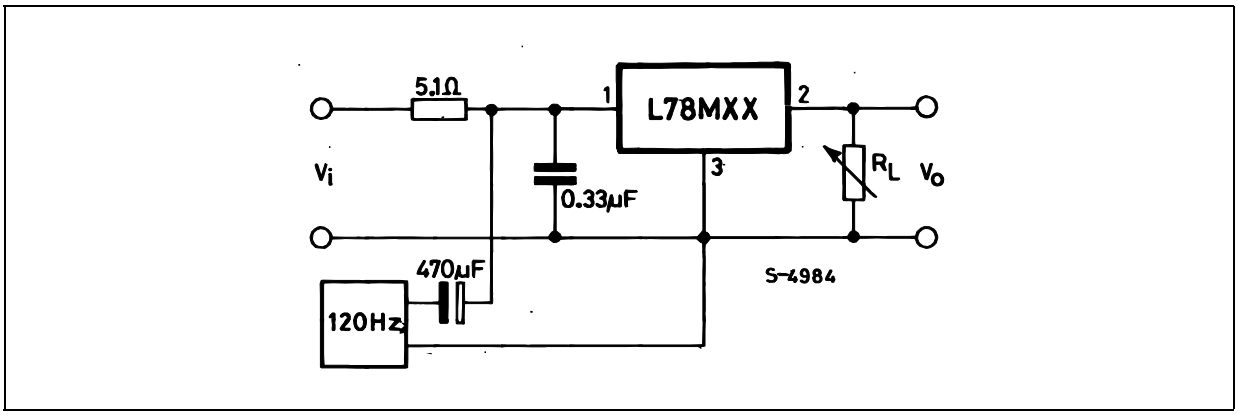

ELECTRICAL CHARACTERISTICS OF L78M05C (refer to the test circuits, T_J = 25°C, V_I = 10V, I_O = 350 mA, C_I = 0.33 µF, C_O = 0.1 µF unless otherwise specified).

Symbol	Parameter	Test Conditions		Min.	Typ.	Max.	Unit
V_O	Output Voltage			4.8	5	5.2	V
V_O	Output Voltage	I_O = 5 to 350 mA	V_I = 7 to 20 V	4.75	5	5.25	V
ΔV_O	Line Regulation	V_I = 7 to 25 V	I_O = 200 mA			100	mV
		V_I = 8 to 25 V	I_O = 200 mA			50	
ΔV_O	Load Regulation	I_O = 5 to 500 mA	T_J = 25°C			100	mV
		I_O = 5 to 200 mA	T_J = 25°C			50	
I_d	Quiescent Current					6	mA
ΔI_d	Quiescent Current Change	I_O = 5 to 350 mA				0.5	mA
		I_O = 200 mA	V_I = 8 to 25 V			0.8	
$\Delta V_O/\Delta T$	Output Voltage Drift	I_O = 5 mA	T_J = 0 to 125°C		-0.5		mV/°C
SVR	Supply Voltage Rejection	V_I = 8 to 18 V I_O = 300mA	f = 120Hz	62			dB
eN	Output Noise Voltage	B =10Hz to 100KHz			40		µV
V_d	Dropout Voltage				2		V
I_{sc}	Short Circuit Current	V_I = 35 V			300		mA

ELECTRICAL CHARACTERISTICS OF L78M06C (refer to the test circuits, T_J = 25°C, V_I = 11V, I_O = 350 mA, C_I = 0.33 µF, C_O = 0.1 µF unless otherwise specified).

Symbol	Parameter	Test Conditions		Min.	Typ.	Max.	Unit
V_O	Output Voltage			5.75	6	6.25	V
V_O	Output Voltage	I_O = 5 to 350 mA	V_I = 8 to 21 V	5.7	6	6.3	V
ΔV_O	Line Regulation	V_I = 8 to 25 V	I_O = 200 mA			100	mV
		V_I = 9 to 25 V	I_O = 200 mA			50	
ΔV_O	Load Regulation	I_O = 5 to 500 mA	T_J = 25°C			120	mV
		I_O = 5 to 200 mA	T_J = 25°C			60	
I_d	Quiescent Current					6	mA
ΔI_d	Quiescent Current Change	I_O = 5 to 350 mA				0.5	mA
		I_O = 200 mA	V_I = 9 to 25 V			0.8	
$\Delta V_O/\Delta T$	Output Voltage Drift	I_O = 5 mA	T_J = 0 to 125°C		-0.5		mV/°C
SVR	Supply Voltage Rejection	V_I = 9 to 19 V I_O = 300mA	f = 120Hz	59			dB
eN	Output Noise Voltage	B =10Hz to 100KHz			45		µV
V_d	Dropout Voltage				2		V
I_{sc}	Short Circuit Current	V_I = 35 V			270		mA

ELECTRICAL CHARACTERISTICS OF L78M08C (refer to the test circuits, T_J = 25°C, V_I = 14V, I_O = 350 mA, C_I = 0.33 µF, C_O = 0.1 µF unless otherwise specified).

Symbol	Parameter	Test Conditions	Min.	Typ.	Max.	Unit
V_O	Output Voltage		7.7	8	8.3	V
V_O	Output Voltage	I_O = 5 to 350 mA V_I = 10.5 to 23 V	7.6	8	8.4	V
ΔV_O	Line Regulation	V_I = 10.5 to 25 V I_O = 200 mA			100	mV
		V_I = 11 to 25 V I_O = 200 mA			50	
ΔV_O	Load Regulation	I_O = 5 to 500 mA T_J = 25°C			160	mV
		I_O = 5 to 200 mA T_J = 25°C			80	
I_d	Quiescent Current				6	mA
ΔI_d	Quiescent Current Change	I_O = 5 to 350 mA			0.5	mA
		I_O = 200 mA V_I = 10.5 to 25 V			0.8	
$\Delta V_O/\Delta T$	Output Voltage Drift	I_O = 5 mA T_J = 0 to 125°C		-0.5		mV/°C
SVR	Supply Voltage Rejection	V_I = 11.5 to 21.5 V f = 120Hz I_O = 300mA	56			dB
eN	Output Noise Voltage	B =10Hz to 100KHz		52		µV
V_d	Dropout Voltage			2		V
I_{sc}	Short Circuit Current	V_I = 35 V		250		mA

ELECTRICAL CHARACTERISTICS OF L78M09C (refer to the test circuits, T_J = 25°C, V_I = 15V, I_O = 350 mA, C_I = 0.33 µF, C_O = 0.1 µF unless otherwise specified).

Symbol	Parameter	Test Conditions	Min.	Typ.	Max.	Unit
V_O	Output Voltage		8.65	9	9.35	V
V_O	Output Voltage	I_O = 5 to 350 mA V_I = 11.5 to 24 V	8.55	9	9.45	V
ΔV_O	Line Regulation	V_I = 11.5 to 25 V I_O = 200 mA			100	mV
		V_I = 12 to 25 V I_O = 200 mA			50	
ΔV_O	Load Regulation	I_O = 5 to 500 mA T_J = 25°C			180	mV
		I_O = 5 to 200 mA T_J = 25°C			90	
I_d	Quiescent Current				6	mA
ΔI_d	Quiescent Current Change	I_O = 5 to 350 mA			0.5	mA
		I_O = 200 mA V_I = 11.5 to 25 V			0.8	
$\Delta V_O/\Delta T$	Output Voltage Drift	I_O = 5 mA T_J = 0 to 125°C		-0.5		mV/°C
SVR	Supply Voltage Rejection	V_I = 12.5 to 23 V f = 120Hz I_O = 300mA	56			dB
eN	Output Noise Voltage	B =10Hz to 100KHz		58		µV
V_d	Dropout Voltage			2		V
I_{sc}	Short Circuit Current	V_I = 35 V		250		mA

ELECTRICAL CHARACTERISTICS OF L78M10C (refer to the test circuits, T_J = 25°C, V_I = 16V, I_O = 350 mA, C_I = 0.33 µF, C_O = 0.1 µF unless otherwise specified).

Symbol	Parameter	Test Conditions		Min.	Typ.	Max.	Unit
V_O	Output Voltage			9.6	10	10.4	V
V_O	Output Voltage	I_O = 5 to 350 mA	V_I = 12.5 to 25 V	9.5	10	10.5	V
ΔV_O	Line Regulation	V_I = 12.5 to 30 V	I_O = 200 mA			100	mV
		V_I = 13 to 30 V	I_O = 200 mA			50	
ΔV_O	Load Regulation	I_O = 5 to 500 mA	T_J = 25°C			200	mV
		I_O = 5 to 200 mA	T_J = 25°C			100	
I_d	Quiescent Current					6	mA
ΔI_d	Quiescent Current Change	I_O = 5 to 350 mA				0.5	mA
		I_O = 200 mA	V_I = 12.5 to 30 V			0.8	
$\Delta V_O/\Delta T$	Output Voltage Drift	I_O = 5 mA	T_J = 0 to 125°C		-0.5		mV/°C
SVR	Supply Voltage Rejection	V_I = 13.5 to 24 V I_O = 300mA	f = 120Hz	56			dB
eN	Output Noise Voltage	B =10Hz to 100KHz			64		µV
V_d	Dropout Voltage				2		V
I_{sc}	Short Circuit Current	V_I = 35 V			245		mA

ELECTRICAL CHARACTERISTICS OF L78M12C (refer to the test circuits, T_J = 25°C, V_I = 19V, I_O = 350 mA, C_I = 0.33 µF, C_O = 0.1 µF unless otherwise specified).

Symbol	Parameter	Test Conditions		Min.	Typ.	Max.	Unit
V_O	Output Voltage			11.5	12	12.5	V
V_O	Output Voltage	I_O = 5 to 350 mA	V_I = 14.5 to 27 V	11.4	12	12.6	V
ΔV_O	Line Regulation	V_I = 14.5 to 30 V	I_O = 200 mA			100	mV
		V_I = 16 to 30 V	I_O = 200 mA			50	
ΔV_O	Load Regulation	I_O = 5 to 500 mA	T_J = 25°C			240	mV
		I_O = 5 to 200 mA	T_J = 25°C			120	
I_d	Quiescent Current					6	mA
ΔI_d	Quiescent Current Change	I_O = 5 to 350 mA				0.5	mA
		I_O = 200 mA	V_I = 14.5 to 30 V			0.8	
$\Delta V_O/\Delta T$	Output Voltage Drift	I_O = 5 mA	T_J = 0 to 125°C		-1		mV/°C
SVR	Supply Voltage Rejection	V_I = 15 to 25 V I_O = 300mA	f = 120Hz	55			dB
eN	Output Noise Voltage	B =10Hz to 100KHz			75		µV
V_d	Dropout Voltage				2		V
I_{sc}	Short Circuit Current	V_I = 35 V			240		mA

ELECTRICAL CHARACTERISTICS OF L78M15C (refer to the test circuits, T_J = 25°C, V_I = 23V, I_O = 350 mA, C_I = 0.33 µF, C_O = 0.1 µF unless otherwise specified).

Symbol	Parameter	Test Conditions		Min.	Typ.	Max.	Unit
V_O	Output Voltage			14.4	15	15.6	V
V_O	Output Voltage	I_O = 5 to 350 mA	V_I = 17.5 to 30 V	14.25	15	15.75	V
ΔV_O	Line Regulation	V_I = 17.5 to 30 V	I_O = 200 mA			100	mV
		V_I = 20 to 30 V	I_O = 200 mA			50	
ΔV_O	Load Regulation	I_O = 5 to 500 mA	T_J = 25°C			300	mV
		I_O = 5 to 200 mA	T_J = 25°C			150	
I_d	Quiescent Current					6	mA
ΔI_d	Quiescent Current Change	I_O = 5 to 350 mA				0.5	mA
		I_O = 200 mA	V_I = 17.5 to 30 V			0.8	
$\Delta V_O/\Delta T$	Output Voltage Drift	I_O = 5 mA	T_J = 0 to 125°C		-1		mV/°C
SVR	Supply Voltage Rejection	V_I = 18.5 to 28.5 V I_O = 300mA	f = 120Hz	54			dB
eN	Output Noise Voltage	B =10Hz to 100KHz			90		µV
V_d	Dropout Voltage				2		V
I_{sc}	Short Circuit Current	V_I = 35 V			240		mA

ELECTRICAL CHARACTERISTICS OF L78M18C (refer to the test circuits, T_J = 25°C, V_I = 26V, I_O = 350 mA, C_I = 0.33 µF, C_O = 0.1 µF unless otherwise specified).

Symbol	Parameter	Test Conditions		Min.	Typ.	Max.	Unit
V_O	Output Voltage			17.3	18	18.7	V
V_O	Output Voltage	I_O = 5 to 350 mA	V_I = 20.5 to 33 V	17.1	18	18.9	V
ΔV_O	Line Regulation	V_I = 21 to 33 V	I_O = 200 mA			100	mV
		V_I = 24 to 33 V	I_O = 200 mA			50	
ΔV_O	Load Regulation	I_O = 5 to 500 mA	T_J = 25°C			360	mV
		I_O = 5 to 200 mA	T_J = 25°C			180	
I_d	Quiescent Current					6	mA
ΔI_d	Quiescent Current Change	I_O = 5 to 350 mA				0.5	mA
		I_O = 200 mA	V_I = 21 to 33 V			0.8	
$\Delta V_O/\Delta T$	Output Voltage Drift	I_O = 5 mA	T_J = 0 to 125°C		-1.1		mV/°C
SVR	Supply Voltage Rejection	V_I = 22 to 32 V I_O = 300mA	f = 120Hz	53			dB
eN	Output Noise Voltage	B =10Hz to 100KHz			100		µV
V_d	Dropout Voltage				2		V
I_{sc}	Short Circuit Current	V_I = 35 V			240		mA

ELECTRICAL CHARACTERISTICS OF L78M20C (refer to the test circuits, T_J = 25°C, V_I = 29V, I_O = 350 mA, C_I = 0.33 µF, C_O = 0.1 µF unless otherwise specified).

Symbol	Parameter	Test Conditions		Min.	Typ.	Max.	Unit
V_O	Output Voltage			19.2	20	20.8	V
V_O	Output Voltage	I_O = 5 to 350 mA	V_I = 23 to 35 V	19	20	21	V
ΔV_O	Line Regulation	V_I = 23 to 35 V	I_O = 200 mA			100	mV
		V_I = 24 to 35 V	I_O = 200 mA			50	
ΔV_O	Load Regulation	I_O = 5 to 500 mA	T_J = 25°C			400	mV
		I_O = 5 to 200 mA	T_J = 25°C			200	
I_d	Quiescent Current					6	mA
ΔI_d	Quiescent Current Change	I_O = 5 to 350 mA				0.5	mA
		I_O = 200 mA	V_I = 23 to 35 V			0.8	
$\Delta V_O/\Delta T$	Output Voltage Drift	I_O = 5 mA	T_J = 0 to 125°C		-1.1		mV/°C
SVR	Supply Voltage Rejection	V_I = 24 to 34 V I_O = 300mA	f = 120Hz	53			dB
eN	Output Noise Voltage	B =10Hz to 100KHz			110		µV
V_d	Dropout Voltage				2		V
I_{sc}	Short Circuit Current	V_I = 35 V			240		mA

ELECTRICAL CHARACTERISTICS OF L78M24C (refer to the test circuits, T_J = 25°C, V_I = 33V, I_O = 350 mA, C_I = 0.33 µF, C_O = 0.1 µF unless otherwise specified),

Symbol	Parameter	Test Conditions		Min.	Typ.	Max.	Unit
V_O	Output Voltage			23	24	25	V
V_O	Output Voltage	I_O = 5 to 350 mA	V_I = 27 to 38 V	22.8	24	25.2	V
ΔV_O	Line Regulation	V_I = 27 to 38 V	I_O = 200 mA			100	mV
		V_I = 28 to 38 V	I_O = 200 mA			50	
ΔV_O	Load Regulation	I_O = 5 to 500 mA	T_J = 25°C			480	mV
		I_O = 5 to 200 mA	T_J = 25°C			240	
I_d	Quiescent Current					6	mA
ΔI_d	Quiescent Current Change	I_O = 5 to 350 mA				0.5	mA
		I_O = 200 mA	V_I = 27 to 38 V			0.8	
$\Delta V_O/\Delta T$	Output Voltage Drift	I_O = 5 mA	T_J = 0 to 125°C		-1.2		mV/°C
SVR	Supply Voltage Rejection	V_I = 28 to 38 V I_O = 300mA	f = 120Hz	50			dB
eN	Output Noise Voltage	B =10Hz to 100KHz			170		µV
V_d	Dropout Voltage				2		V
I_{sc}	Short Circuit Current	V_I = 35 V			240		mA

Figure 4 : Dropout Voltage vs Junction Temperature

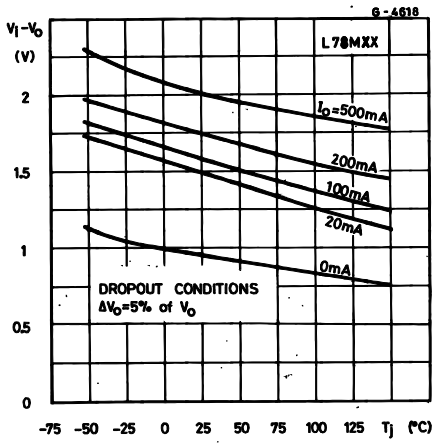

Figure 5 : Dropout Characteristics

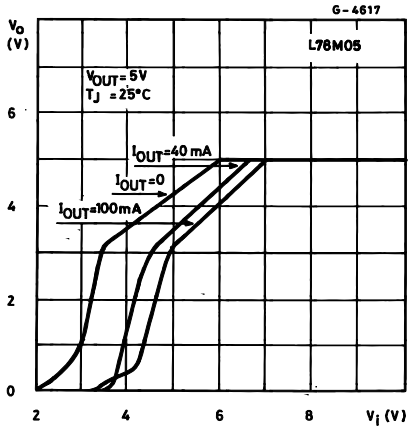

Figure 6 : Peak Output Current vs Input-Output Differential Voltage

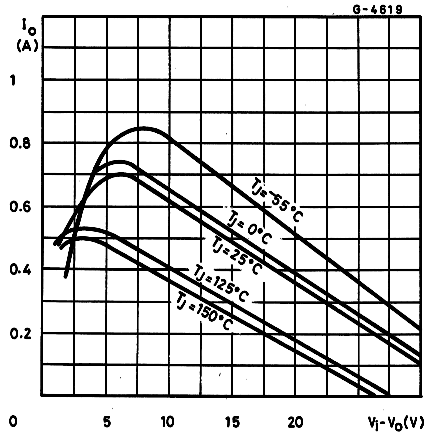

Figure 7 : Output Voltage vs Junction Temperature

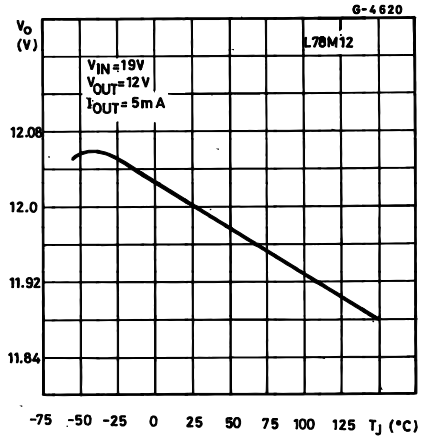

Figure 8 : Supply Voltage Rejection vs Frequency

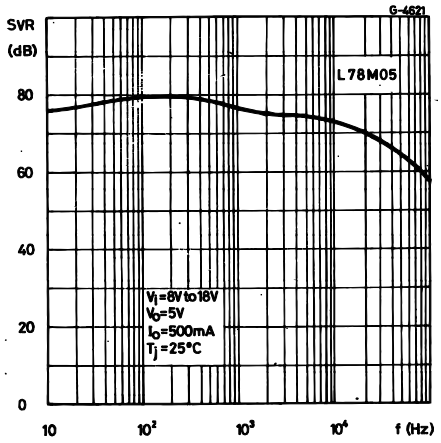

Figure 9 : Quiescent Current vs Junction Temperature

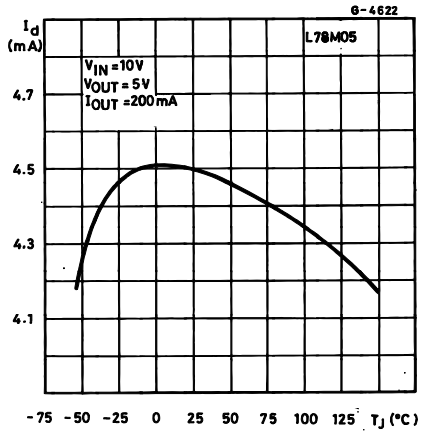

Figure 10 : Load Transient Response

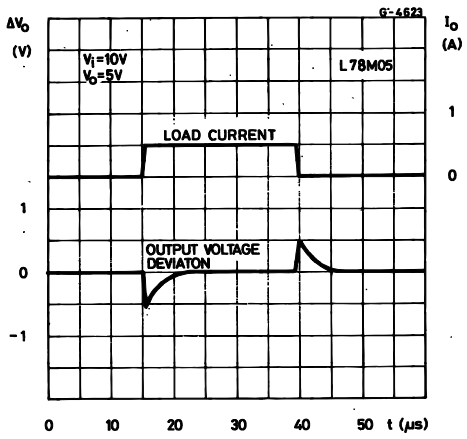

Figure 11 : Line Transient Response

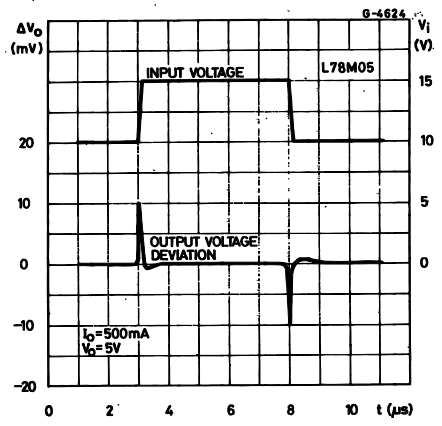

Figure 12 : Quiescent Current vs Input Voltage

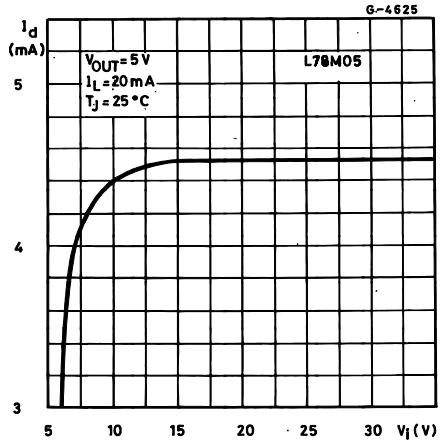

Figure 13 : Fixed Output Regulator

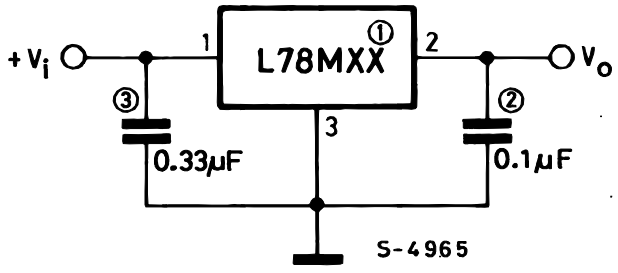

NOTE:
1. To specify an output voltage, substitute voltage value for "XX".
2. Although no output capacitor is need for stability, it does improve transient response.
3. Required if regulator is locate an appreciable distance from power supply filter.

Figure 14 :

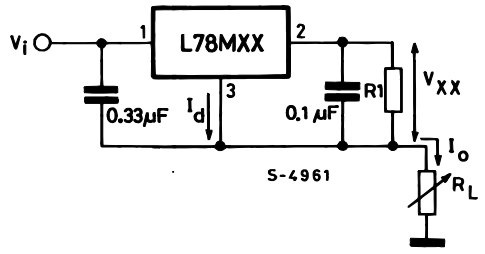

$$I_O = \frac{V_{XX}}{R_1} + I_d$$

Figure 15 :

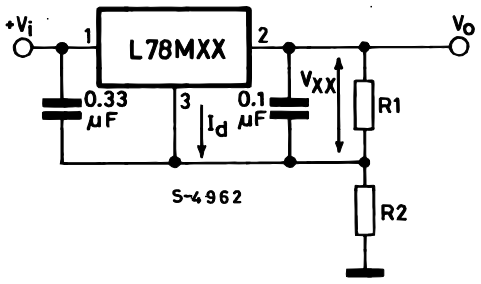

$I_{R1} \geq 5\ Id$

$$V_O = V_{XX}\left(1 + \frac{R_2}{R_1}\right) + I_d R_2$$

Figure 16 : Adjustable Output Regulator (7 to 30V)

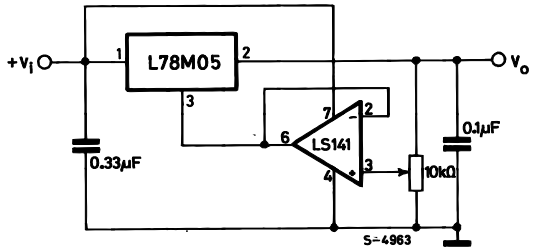

Figure 17 : 0.5 to 10V Regulator

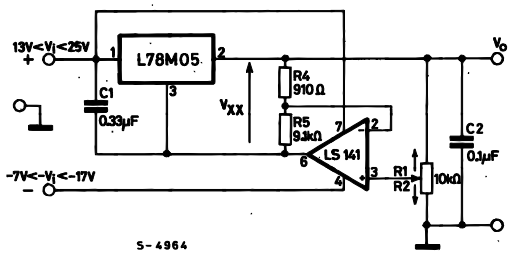

$$V_O = V_{xx} \frac{R_4}{R_1}$$

Figure 18 : High Current Voltage Regulator

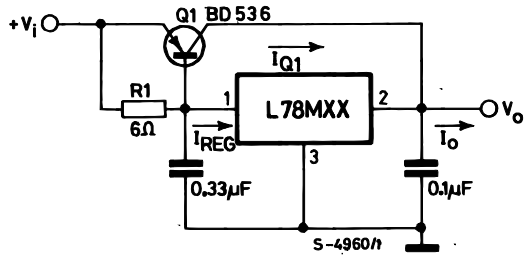

$$R_1 = \frac{V_{BEQ1}}{I_{REQ} - \frac{I_{Q1}}{\beta_{Q1}}}$$

$$I_O = I_{REG} + Q_1 \left(I_{REG} \frac{V_{BEQ1}}{R_1}\right)$$

Figure 19 : High Output Current with Short Circuit

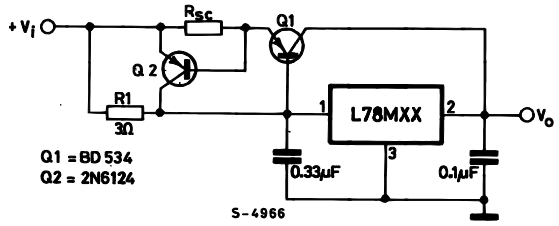

$$V_O = \frac{V_{BEQ2}}{I_{SC}}$$

Figure 20 : Tracking Voltage Regulator

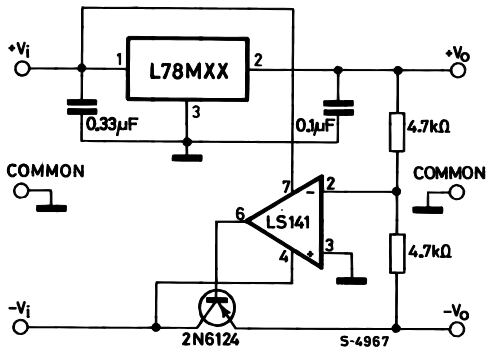

Figure 21 : High Input Voltage Circuit

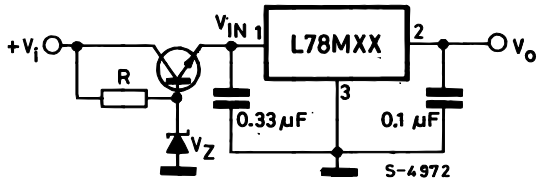

$V_{IN} = V_I - (V_Z + V_{BE})$

Figure 22 : Reducing Power Dissipation with Dropping Resistor

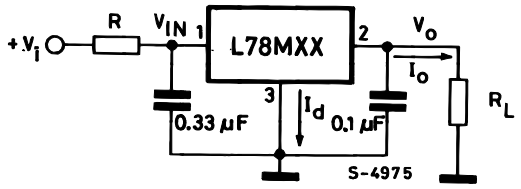

$$R = \frac{V_{I(min)} - V_{XX} - V_{DROP(max)}}{I_{O(max)} + I_{d(max)}}$$

Figure 23 : Power AM Modulator (unity voltage gain, $I_O \leq 0.5$)

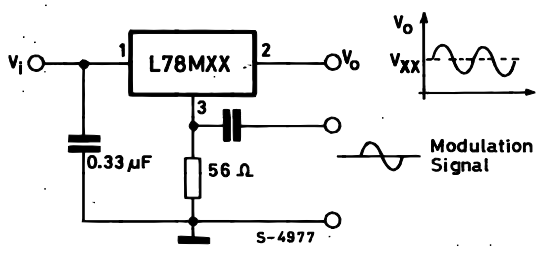

NOTE: The circuit performs well up to 100 KHz.

Figure 24 : Adjustable Output Voltage with Temperature Compensation

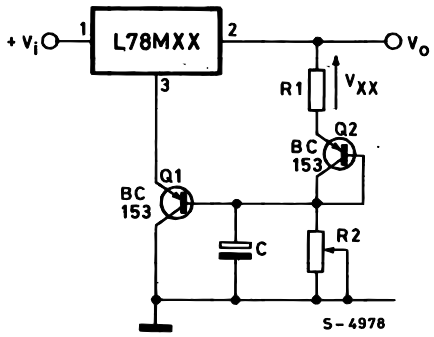

$$V_O = V_{XX}\left(1+\frac{R_2}{R_1}\right) + V_{BE}$$

NOTE: Q_2 is connected as a diode in order to compensate the variation of the Q_1 V_{BE} with the temperature. C allows a slow risetime of the V_O.

TO-220 MECHANICAL DATA

DIM.	mm.			inch		
	MIN.	TYP	MAX.	MIN.	TYP.	MAX.
A	4.40		4.60	0.173		0.181
C	1.23		1.32	0.048		0.051
D	2.40		2.72	0.094		0.107
D1		1.27			0.050	
E	0.49		0.70	0.019		0.027
F	0.61		0.88	0.024		0.034
F1	1.14		1.70	0.044		0.067
F2	1.14		1.70	0.044		0.067
G	4.95		5.15	0.194		0.203
G1	2.4		2.7	0.094		0.106
H2	10.0		10.40	0.393		0.409
L2		16.4			0.645	
L4	13.0		14.0	0.511		0.551
L5	2.65		2.95	0.104		0.116
L6	15.25		15.75	0.600		0.620
L7	6.2		6.6	0.244		0.260
L9	3.5		3.93	0.137		0.154
DIA.	3.75		3.85	0.147		0.151

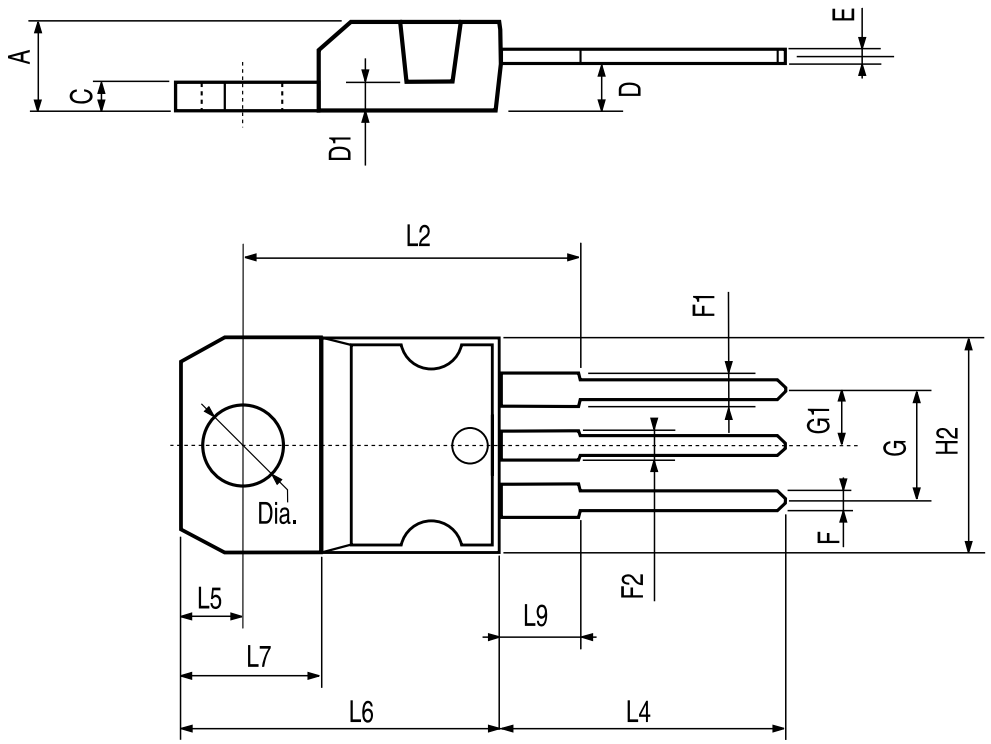

P011C

TO-220FP MECHANICAL DATA

DIM.	mm.			inch		
	MIN.	TYP	MAX.	MIN.	TYP.	MAX.
A	4.40		4.60	0.173		0.181
B	2.5		2.7	0.098		0.106
D	2.5		2.75	0.098		0.108
E	0.45		0.70	0.017		0.027
F	0.75		1	0.030		0.039
F1	1.15		1.50	0.045		0.059
F2	1.15		1.50	0.045		0.059
G	4.95		5.2	0.194		0.204
G1	2.4		2.7	0.094		0.106
H	10.0		10.40	0.393		0.409
L2		16			0.630	
L3	28.6		30.6	1.126		1.204
L4	9.8		10.6	0.385		0.417
L6	15.9		16.4	0.626		0.645
L7	9		9.3	0.354		0.366
DIA.	3		3.2	0.118		0.126

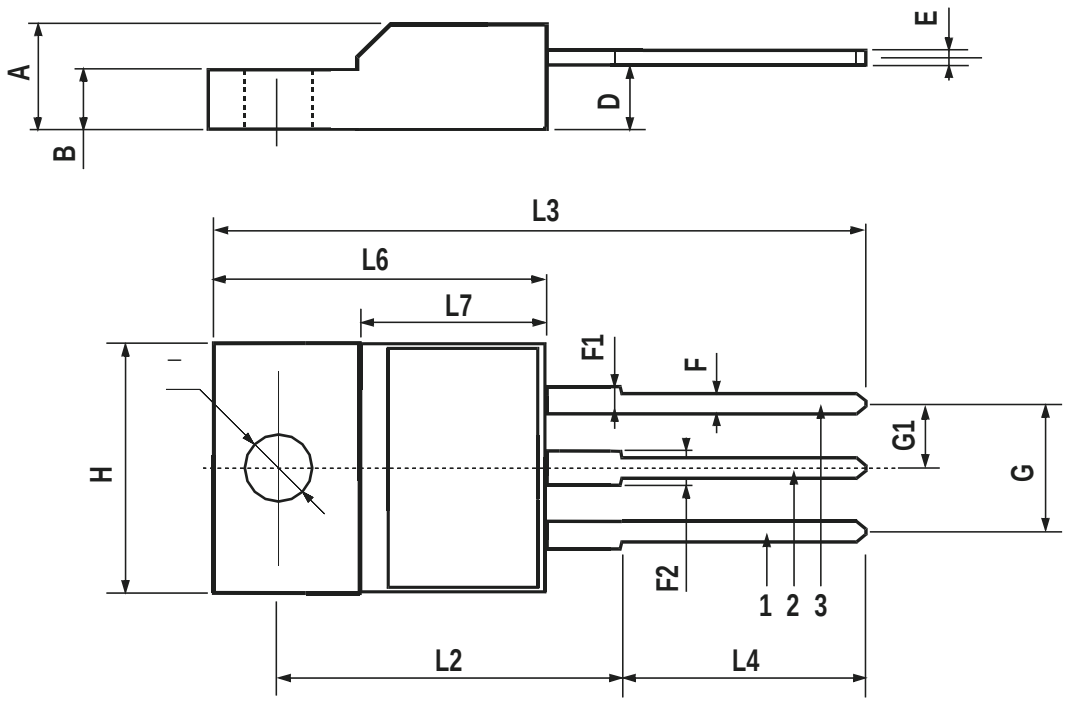

7012510/G

DPAK MECHANICAL DATA

DIM.	mm.			inch		
	MIN.	TYP	MAX.	MIN.	TYP.	MAX.
A	2.2		2.4	0.086		0.094
A1	0.9		1.1	0.035		0.043
A2	0.03		0.23	0.001		0.009
B	0.64		0.9	0.025		0.035
B2	5.2		5.4	0.204		0.212
C	0.45		0.6	0.017		0.023
C2	0.48		0.6	0.019		0.023
D	6		6.2	0.236		0.244
D1		5.1			0.200	
E	6.4		6.6	0.252		0.260
E1		4.7			0.185	
e		2.28			0.090	
e1	4.4		4.6	0.173		0.181
H	9.35		10.1	0.368		0.397
L		1			0.039	
(L1)		2.8			0.110	
L2		0.8			0.031	
L4	0.6		1	0.023		0.039

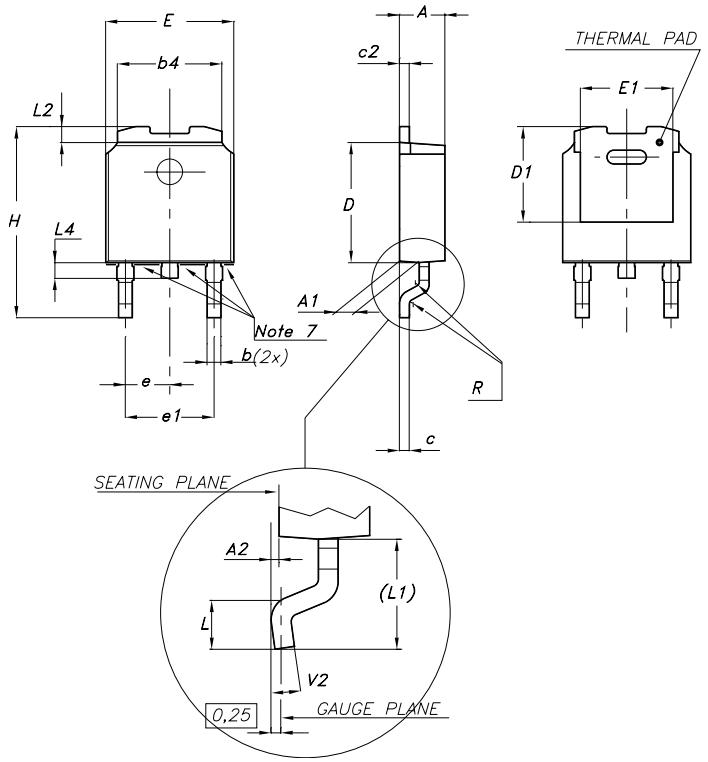

0068772-F

IPAK MECHANICAL DATA

DIM.	mm.			inch		
	MIN.	TYP	MAX.	MIN.	TYP.	MAX.
A	2.2		2.4	0.086		0.094
A1	0.9		1.1	0.035		0.043
B	0.64		0.9	0.025		0.035
B2	5.2		5.4	0.204		0.212
B3			0.95			0.037
B5		0.3			0.012	
B6			0.95			0.037
C	0.45		0.6	0.017		0.023
C2	0.48		0.6	0.019		0.023
D	6		6.2	0.236		0.244
E	6.4		6.6	0.252		0.260
G	4.4		4.6	0.173		0.181
H	15.9		16.3	0.626		0.641
L	9		9.4	0.354		0.370
L1	0.8		1.2	0.031		0.047
L2		0.8	1		0.031	0.039

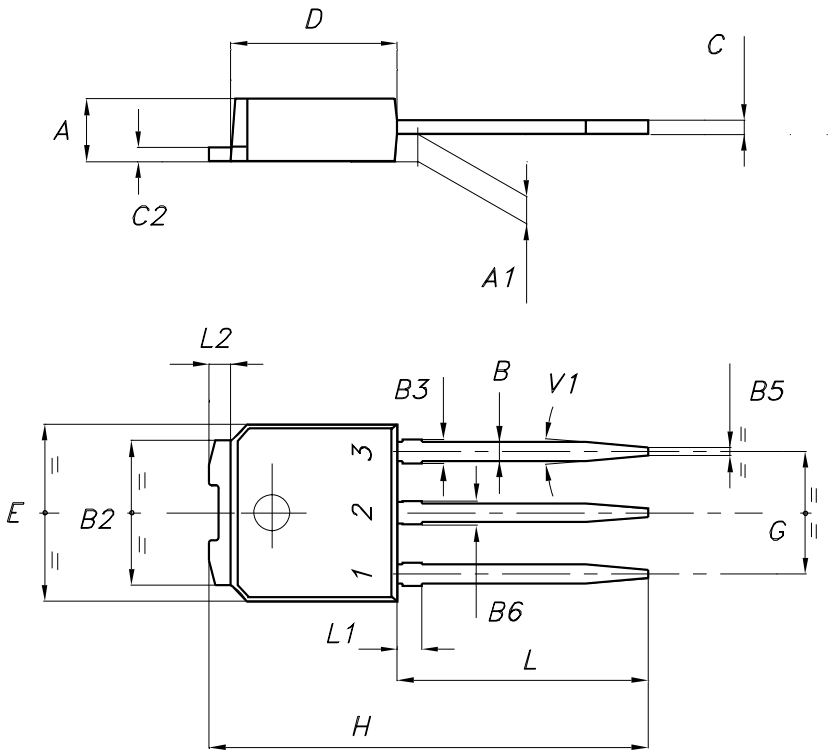

0068771-F

Tape & Reel DPAK-PPAK MECHANICAL DATA

DIM.	mm.			inch		
	MIN.	TYP	MAX.	MIN.	TYP.	MAX.
A			330			12.992
C	12.8	13.0	13.2	0.504	0.512	0.519
D	20.2			0.795		
N	60			2.362		
T			22.4			0.882
Ao	6.80	6.90	7.00	0.268	0.272	0.2.76
Bo	10.40	10.50	10.60	0.409	0.413	0.417
Ko	2.55	2.65	2.75	0.100	0.104	0.105
Po	3.9	4.0	4.1	0.153	0.157	0.161
P	7.9	8.0	8.1	0.311	0.315	0.319

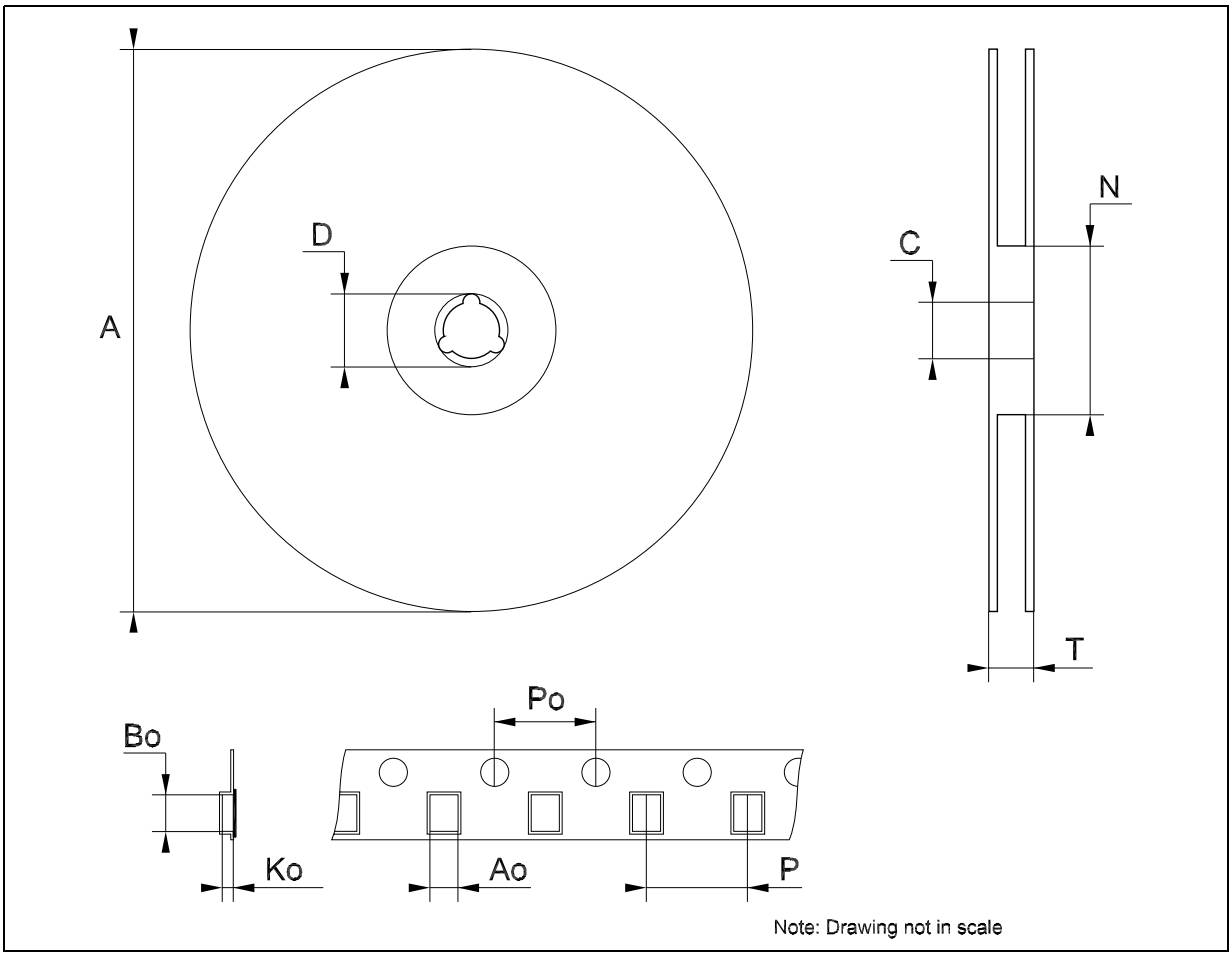

Information furnished is believed to be accurate and reliable. However, STMicroelectronics assumes no responsibility for the consequences of use of such information nor for any infringement of patents or other rights of third parties which may result from its use. No license is granted by implication or otherwise under any patent or patent rights of STMicroelectronics. Specifications mentioned in this publication are subject to change without notice. This publication supersedes and replaces all information previously supplied. STMicroelectronics products are not authorized for use as critical components in life support devices or systems without express written approval of STMicroelectronics.

The ST logo is a registered trademark of STMicroelectronics

All other names are the property of their respective owners

© 2004 STMicroelectronics - All Rights Reserved

STMicroelectronics GROUP OF COMPANIES

Australia - Belgium - Brazil - Canada - China - Czech Republic - Finland - France - Germany - Hong Kong - India - Israel - Italy - Japan - Malaysia - Malta - Morocco - Singapore - Spain - Sweden - Switzerland - United Kingdom - United States.

http://www.st.com