CMOS 8-BIT MICROCONTROLLER

TMP87CM71F, TMP87CN71F, TMP87CP71F, TMP87CS71F

The 87CM71/N71/P71/S71 are the high speed and high performance 8-bit single chip microcomputers. These MCU contain 6-bit A/D conversion inputs and a VFT (Vacuum Fluorescent Tube) driver on a chip.

PART No.	ROM	RAM	PACKAGE	OTP MCU
TMP87CM71F	32K × 8-bit	1.5K × 8-bit	QFP80-P-1420-0.80B	TMP87PP71F / TMP87PS71F
TMP87CN71F	40K × 8-bit			
TMP87CP71F	48K × 8-bit			
TMP87CS71F	61184 × 8-bit	2.0K × 8-bit		TMP87PS71F

FEATURES

QFP80-P-1420-0.80B

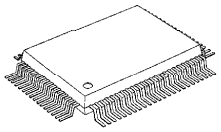

TMP87CM71F
TMP87CN71F
TMP87CP71F
TMP87CS71F
TMP87PP71F
TMP87PS71F

- ◆8-bit single chip microcomputer TLCS-870 Series
- ◆Instruction execution time : 0.5μs (at 8MHz), 122μs (at 32.768 kHz)
- ◆412 basic instructions
  - Multiplication and Division (8 bits × 8 bits , 16 bits ÷ 8 bits)
  - Bit manipulations (Set/Clear/Complement/Move/Test/Exclusive or)
  - 16-bit data operations
  - 1-byte jump/subroutine-call (Short relative jump/ Vector call)
- ◆14 interrupt sources (External : 5, Internal : 9)
  - All sources have independent latches each, and nested interrupt control is available.
  - 3 edge-selectable external interrupts with noise reject
  - High-speed task switching by register bank changeover
- ◆10 Input/Output ports (73 pins)
  - Output : 1 port (8 pins)
  - Input/Output : 9 ports (65 pins)
- ◆Two 16-bit Timer/Counters
  - Timer, Event counter modes
- ◆Two 8-bit Timer/Counters
  - Timer, Event counter, Capture (Pulse width/duty measurement), PWM output, Programmable divider output modes
- ◆Time Base Timer (Interrupt frequency : 1 Hz to 16 kHz)
- ◆Divider output function (frequency : 1 kHz to 8 kHz)
- ◆Watchdog Timer
  - Interrupt source/reset output (programmable)
- ◆8-bit Serial Interface
  - With 8 bytes transmit/receive data buffer
  - Internal/external serial clock, and 4/8-bit mode
- ◆**8-bit High Speed Serial Output** (rate : max. 1 bit / μs)
- ◆**6-bit A/D conversion input** (6 channels)
- ◆**Vacuum Fluorescent Tube Driver** (automatic display)
  - High breakdown voltage ports
- ◆Key scanning function
  - Key-matrix constructed by segment outputs (1 to 16) and key inputs (1 to 8)
- ◆Dual clock operation
  - Single/Dual-clock mode (option)
- ◆Five Power saving operating modes
  - STOP mode : Oscillation stops. Battery/Capacitor back-up. Port output hold/High-impedance.
  - SLOW mode: Low power consumption operation using low-frequency clock (32.768 kHz).
  - IDLE1 mode : CPU stops, and Peripherals operate using high-frequency clock. Release by interrupts.
  - IDLE2 mode : CPU stops, and Peripherals operate using high-and low-frequency clock. Release by interrupts.
  - SLEEP mode : CPU stops, and Peripherals operate using low-frequency clock. Release by interrupts.
- ◆Wide operating voltage : 2.7 to 5.5 V at 4.19 MHz/32.768 kHz, 4.5 to 5.5 V at 8 MHz/32.768 kHz (87CM71/N71/P71)
  2.7 to 5.5 V at 32.768kHz, 4.5 to 5.5 V at 8MHz/32.768 kHz (87CS71)
- ◆Emulation Pod : BM87CK70F0B

PIN ASSIGNMENTS (TOP VIEW)

QFP80-P-1420-0.80B

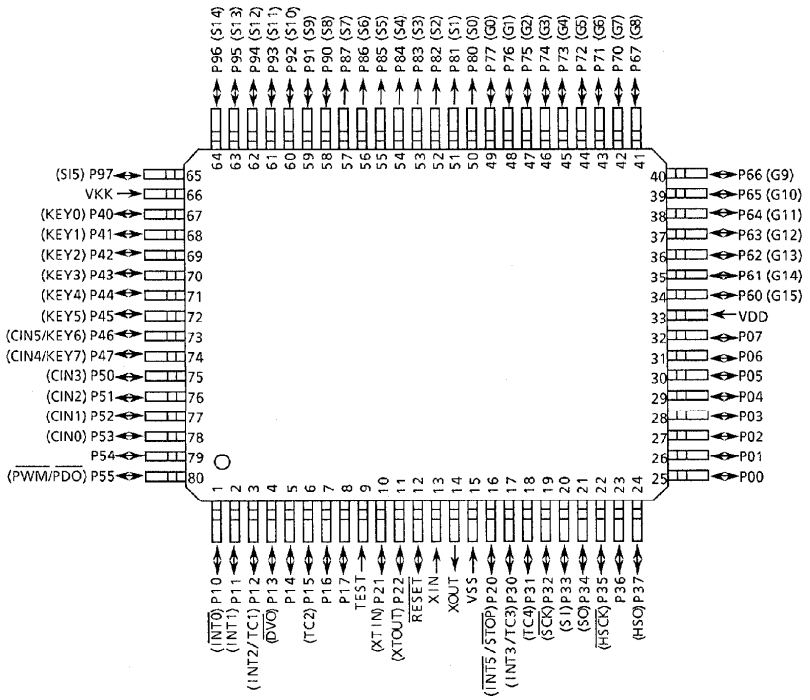

BLOCK DIAGRAM

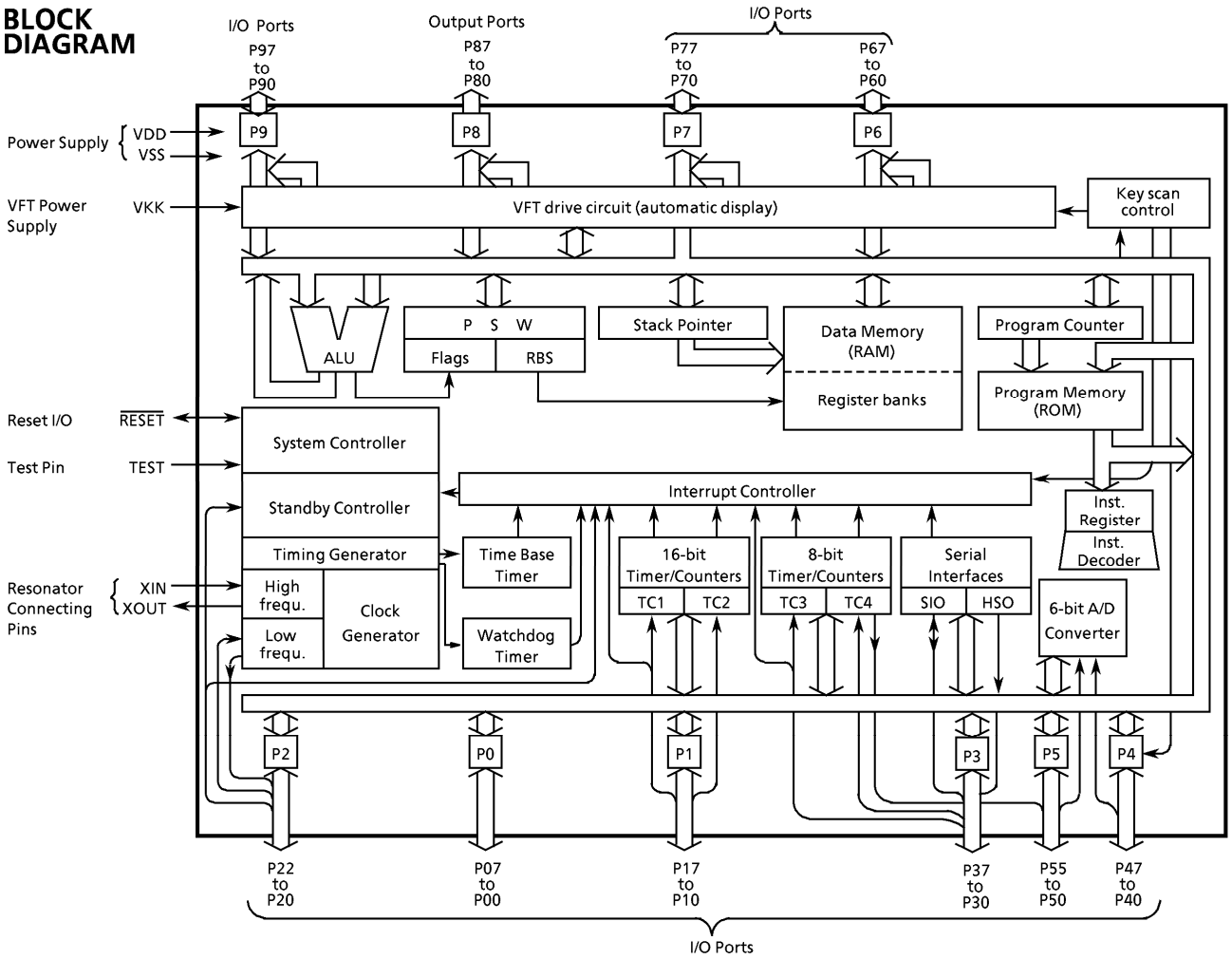

PIN FUNCTION

PIN NAME	Input / Output	FUNCTION	
P07 to P00	I/O	Two 8-bit programmable input/output ports (tri-state). Each bit of these ports can be individually configured as an input or an output under software control. During reset, all bits are configured as inputs. When used as a divider output, the latch must be set to "1".	
P17, P16, P14	I/O		
P15 (TC2)	I/O (Input)		Timer/Counter 2 input
P13 ($\overline{DVO}$)	I/O (Output)		Divider output
P12 (INT2 / TC1)	I/O (Input)		External interrupt input 2 or Timer/Counter 1 input
P11 (INT1)			External interrupt input 1
P10 ($\overline{INT0}$)			External interrupt input 0
P22 (XTOUT)	I/O (Output)	3-bit input/output port with latch. When used as an input port, the latch must be set to "1".	Resonator connecting pins (32.768 kHz). For inputting external clock, XTIN is used and XTOUT is opened.
P21 (XTIN)	I/O (Input)		
P20 ($\overline{INT5}$ / $\overline{STOP}$)			External interrupt input 5 or STOP mode release signal input
P37 (HSO)	I/O (Output)	8-bit input/output port with latch. When used as an input port, a HSO output, a SIO input/output, a timer/counter input, or an interrupt input, the latch must be set to "1".	HSO serial data output
P36	I/O		
P35 ($\overline{HSCK}$)	I/O (Output)		HSO serial clock output
P34 (SO)			SIO serial data output
P33 (SI)	I/O (Input)		SIO serial data input
P32 ($\overline{SCK}$)	I/O (I/O)		SIO serial clock input/output
P31 (TC4)	I/O (Input)		Timer/Counter 4 input
P30 (INT3 / TC3)			External interrupt input 3 or Timer/Counter 3 input
P47 (CIN4 / KEY7), P46 (CIN5 / KEY6)	I/O (Input)	8-bit input/output port with latch. When used as an input port, the latch must be set to "1".	Comparator inputs or Key scan inputs
P45 (KEY5) to P40 (KEY0)			Key scan inputs
P55 ($\overline{PWM}$ / $\overline{PDO}$)	I/O (Output)	6-bit input/output port with latch. When used as an input port, a comparator input, or a $\overline{PWM}$ / $\overline{PDO}$ output, the latch must be set to "1".	8-bit PWM output or 8-bit programmable divider output
P54	I/O		
P53 (CIN0) to P50 (CIN3)	I/O (Input)		Comparator inputs
P67 (G8) to P60 (G15)	I/O (Output)	Three 8-bit high breakdown voltage I/O ports with the latch. When used as a VFT driver output, the latch must be cleared to"0".	VFT digit driver outputs
P77 (G0) to P70 (G7)			
P97 (S15) to P90 (S8)			VFT segment driver outputs (Key strobe outputs)
P87 (S7) to P80 (S0)	Output (Output)	8-bit high breakdown voltage output port with latch. When used as VFT driver output, the latch must be cleared to"0".	
XIN, XOUT	Input, Output	Resonator connecting pins for high-frequency clock. For inputting external clock, XIN is used and XOUT is opened.	
$\overline{RESET}$	I/O	Reset signal input or watchdog timer output/address-trap-reset output/system-clock-reset output.	
TEST	Input	Test pin for out-going test. Be tied to low.	
VDD, VSS	Power Supply	+ 5 V, 0 V (GND)	
VKK		VFT driver power supply	

OPERATIONAL DESCRIPTION

1. CPU CORE FUNCTIONS

The CPU core consists of a CPU, a system clock controller, an interrupt controller, and a watchdog timer. This section provides a description of the CPU core, the program memory (ROM), the data memory (RAM), and the reset circuit.

1.1 Memory Address Map

The TLCS-870 Series is capable of addressing 64K bytes of memory. Figure 1-1 shows the memory address maps of the 87CM71/N71/P71/S71. In the TLCS-870 Series, the memory is organized 4 address spaces (ROM, RAM, SFR, and DBR). It uses a memory mapped I/O system, and all I/O registers are mapped in the SFR/DBR address spaces. There are 16 banks of general-purpose registers. The register banks are also assigned to the first 128 bytes of the RAM address space.

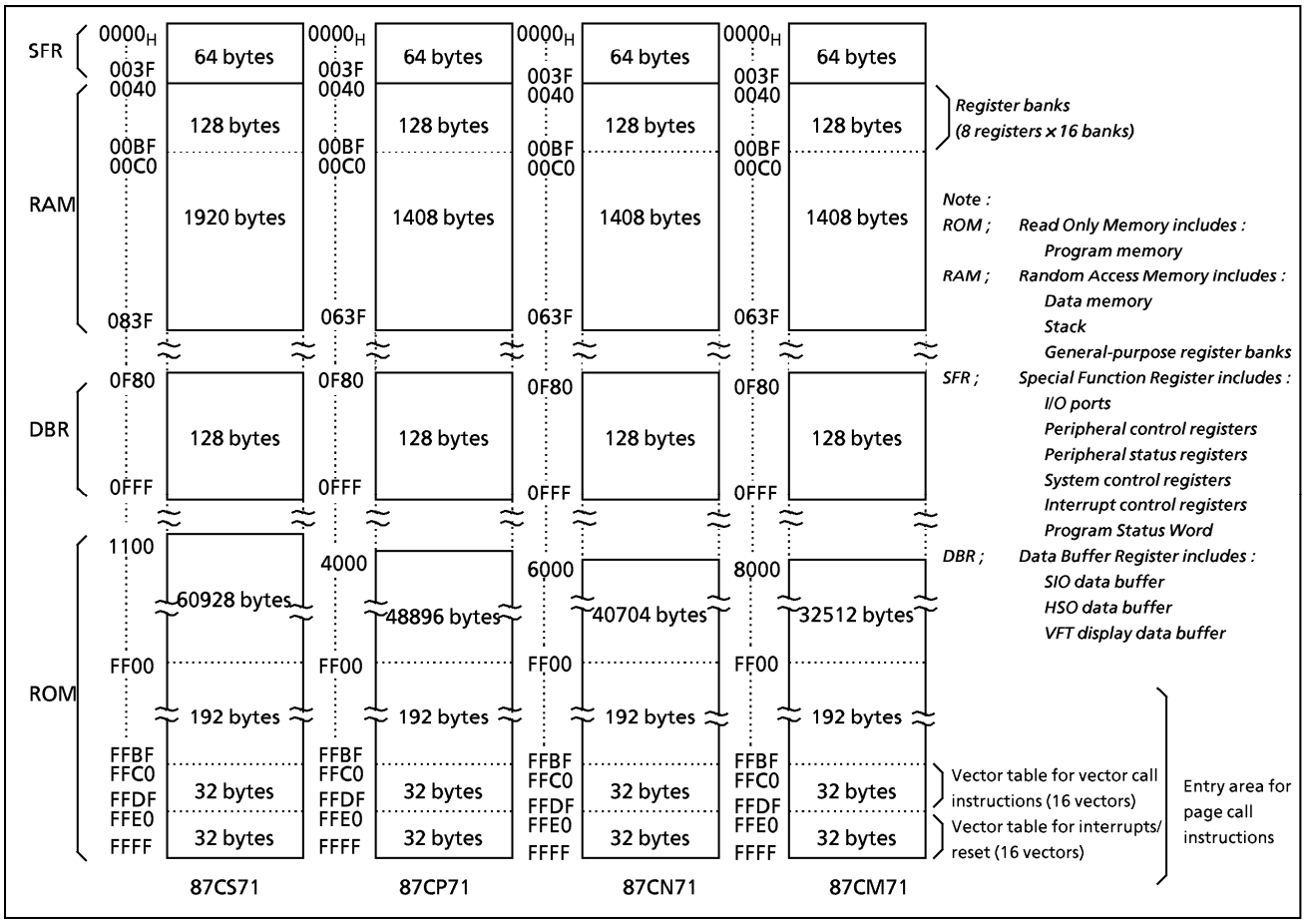

Figure 1-1. Memory Address Maps

1.2 Program Memory (ROM)

The 87CM71 has a 32K × 8-bit (addresses 8000_H-$FFFF_H$), the 87CN71 has a 40K × 8-bit (addresses 6000_H-$FFFF_H$), the 87CP71 has a 48K × 8-bit (addresses 4000_H-$FFFF_H$), the 87CS71 has a 60k × 8-bit (addresses 1100_H-$FFFF_H$) program memory (mask programmed ROM). Figure 1-2 shows the program memory map. Addresses $FF00_H$-$FFFF_H$ in the program memory can also be used for special purposes.

(1) **Interrupt** / **Reset** vector table (addresses $FFE0_H$-$FFFF_H$)
This table consists of a reset vector and 15 interrupt vectors (2 bytes/vector). These vectors store a reset start address and interrupt service routine entry addresses.

(2) Vector table for **vector call** instructions (addresses $FFC0_H$-$FFDF_H$)
This table stores call vectors (subroutine entry address, 2 bytes/vector) for the vector call instructions [CALLV n]. There are 16 vectors. The CALLV instruction increases memory efficiency when utilized for frequently used subroutine calls (called from 3 or more locations).

(3) Entry area (addresses $FF00_H$-$FFFF_H$) for **page call** instructions
This is the subroutine entry address area for the page call instructions [CALLP n]. Addresses $FF00_H$-$FFBF_H$ are normally used because address $FFC0_H$-$FFFF_H$ are used for the vector tables.

Programs and fixed data are stored in the program memory. The instruction to be executed next is read from the address indicated by the current contents of the program counter (PC). There are relative jump and absolute jump instructions. The concepts of page or bank boundaries are not used in the program memory concerning any jump instruction.

Example: The relationship between the jump instructions and the PC.

① 5-bit PC-relative jump [JRS cc , $ + 2 + d]
E8C4H: JRS T, $ + 2 + 08H
When JF = 1, the jump is made to $E8CE_H$, which is 08_H added to the contents of the PC. (The PC contains the address of the instruction being executed + 2; therefore, in this case, the PC contents are $E8C4_H + 2 = E8C6_H$.)

② 8-bit PC-relative jump [JR cc , $ + 2 + d]
E8C4H : JR Z, $ + 2 + 80H
When ZF = 1, the jump is made to $E846_H$, which is $FF80_H$ (– 128) added to the current contents of the PC.

③ 16-bit absolute jump [JP a]
E8C4H : JP 0C235H
An unconditional jump is made to address $C235_H$. The absolute jump instruction can jump anywhere within the entire 64K-byte space.

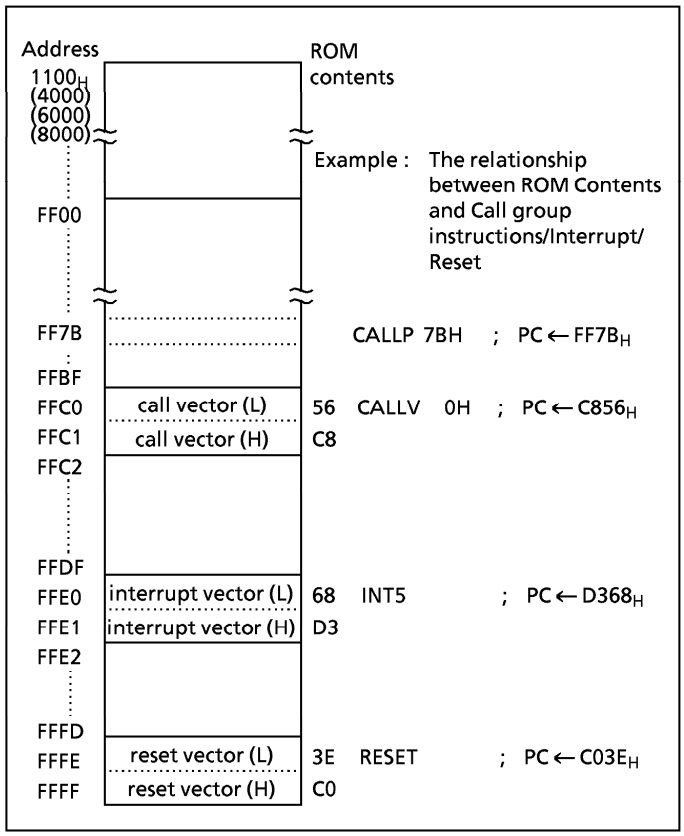

Figure 1-2. Program Memory Map

In the TLCS-870 Series, the same instruction used to access the data memory (e. g. [LD A, (HL)]) is also used to read out fixed data (ROM data) stored in the program memory. The register-offset-PC-relative addressing (PC + A) instructions can also be used, and the code conversion, table look-up and n-way multiple-direction jump processing can easily be programmed.

Example 1 : Loads the ROM contents at the address specified by the HL register pair contents into the accumulator (HL≧4000_H):

```
LD      A, (HL)          ; A←ROM (HL)
```

Example 2 : Converts BCD to 7-segment code (common anode LED). When A = 05_H, 92_H is output to port P3 after executing the following program:

```
        ADD     A, TABLE – $ – 4     ; P3 ←ROM (TABLE + A)
        LD      (P3), (PC + A)
        JRS     T, SNEXT
TABLE : DB      0C0H, 0F9H, 0A4H, 0B0H, 99H, 92H, 82H, 0D8H, 80H, 98H
SNEXT :
```

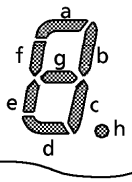

Notes : "$" is a header address of ADD instruction.
DB is a byte data difinition instruction.

Example 3 : N-way multiple jump in accordance with the contents of accumulator (0≦A≦3):

```
SHLC    A            ; if A = 00H then PC←C234H
JP      (PC + A)       if A = 01H then PC←C378H
                       if A = 02H then PC←DA37H
                       if A = 03H then PC←E1B0H
DW      0C234H, 0C378H, 0DA37H, 0E1B0H
```

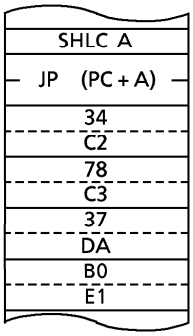

Note : DW is a word data definition instruction.

1.3 Program Counter (PC)

The program counter (PC) is a 16-bit register which indicates the program memory address where the instruction to be executed next is stored. After reset, the user defined reset vector stored in the vector table (addresses $FFFF_H$ and $FFFE_H$) is loaded into the PC ; therefore, program execution is possible from any desired address. For example, when $C0_H$ and $3E_H$ are stored at addresses $FFFF_H$ and $FFFE_H$, respectively, the execution starts from address $C03E_H$ after reset.

The TLCS-870 Series utilizes pipelined processing (instruction pre-fetch); therefore, the PC always indicates 2 addresses in advance. For example, while a 1-byte instruction stored at address $C123_H$ is being executed, the PC contains $C125_H$.

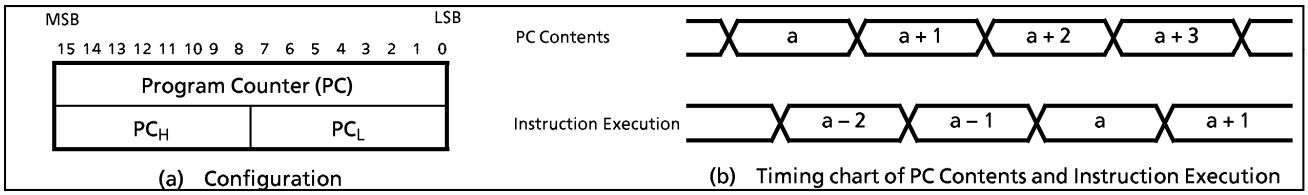

Figure 1-3. Program Counter

1.4 Data Memory (RAM)

The 87CM71/N71/P71 each have 1.5K × 8-bits (addresses 0040_H-$063F_H$) of data memory (static RAM), and the 87CS71 has 2.0k × 8-bits (addresses 0040_H-$083F_H$) of data memory. Figure 1-4 shows the data memory map.

Addresses 0000_H-$00FF_H$ are used as a direct addressing area to enhance instructions which utilize this addressing mode; therefore, addresses 0040_H-$00FF_H$ in the data memory can also be used for user flags or user counters. General-purpose register banks (8 registers × 16 banks) are also assigned to the 128 bytes of addresses 0040_H-$00BF_H$. Access as data memory is still possible even when being used for registers. For example, when the contents of the data memory at address 0040_H is read out, the contents of the accumulator in the bank 0 are also read out. The stack can be located anywhere within the data memory except the register bank area. The stack depth is limited only by the free data memory size. For more details on the stack, see section "1.7 Stack and Stack Pointer".

The 87CM71/N71/P71/S71 cannot execute programs placed in the data memory. When the program counter indicates a data memory address, a bus error occurs and an address-trap-reset applies. The $\overline{RESET}$ pin goes low during the address-trap-reset.

Example 1 : If bit 2 at data memory address $00C0_H$ is "1", 00_H is written to data memory at address $00E3_H$; otherwise, FF_H is written to the data memory at address $00E3_H$:

```
        TEST    (00C0H).2       ;  if (00C0H)2 = 0 then jump
        JRS     T,SZERO
        CLR     (00E3H)         ;  (00E3H) ← 00H
        JRS     T,SNEXT
SZERO:  LD      (00E3H), 0FFH   ;  (00E3H) ← FFH
SNEXT:
```

Example 2 : Increments the contents of data memory at address $00F5_H$, and clears to 00_H when 10_H is exceeded:

```
        INC     (00F5H)         ;  (00F5H) ← (00F5H) + 1
        AND     (00F5H), 0FH    ;  (00F5H) ← (00F5H)∧0FH
```

The data memory contents become unstable when the power supply is turned on; therefore, the data memory should be initialized by an initialization routine. Note that the general-purpuse registers are mapped in the RAM ; therefore, *do not clear RAM at the current bank addresses.*

Example : Clears RAM to "00_H" except the bank 0: (87CM71/N71/P71)

```
        LD      HL, 0048H       ;  Sets start address to HL register pair
        LD      A, H            ;  Sets initial data (00H) to A register
        LD      BC, 05F7H       ;  Sets number of byte to BC register pair
SRAMCLR: LD     (HL+), A
        DEC     BC
        JRS     F, SRAMCLR
```

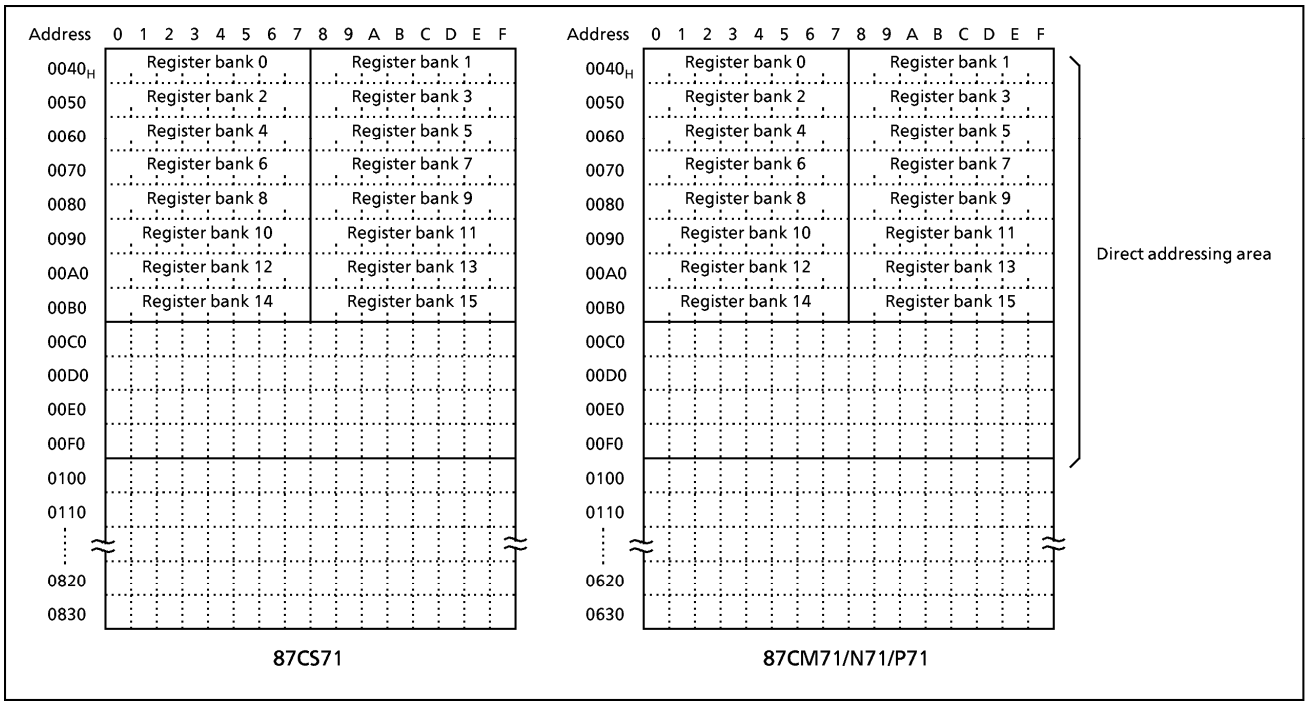

Figure 1-4. Data Memory Map

1.5 General-purpose Register Banks

The general-purpose registers are mapped into addresses 0040_H-$00BF_H$ in the data memory as shown in Figure 1-4. There are 16 register banks, and each bank contains eight 8-bit registers W, A, B, C, D, E, H, and L. Figure 1-5 shows the general-purpose register bank configuration.

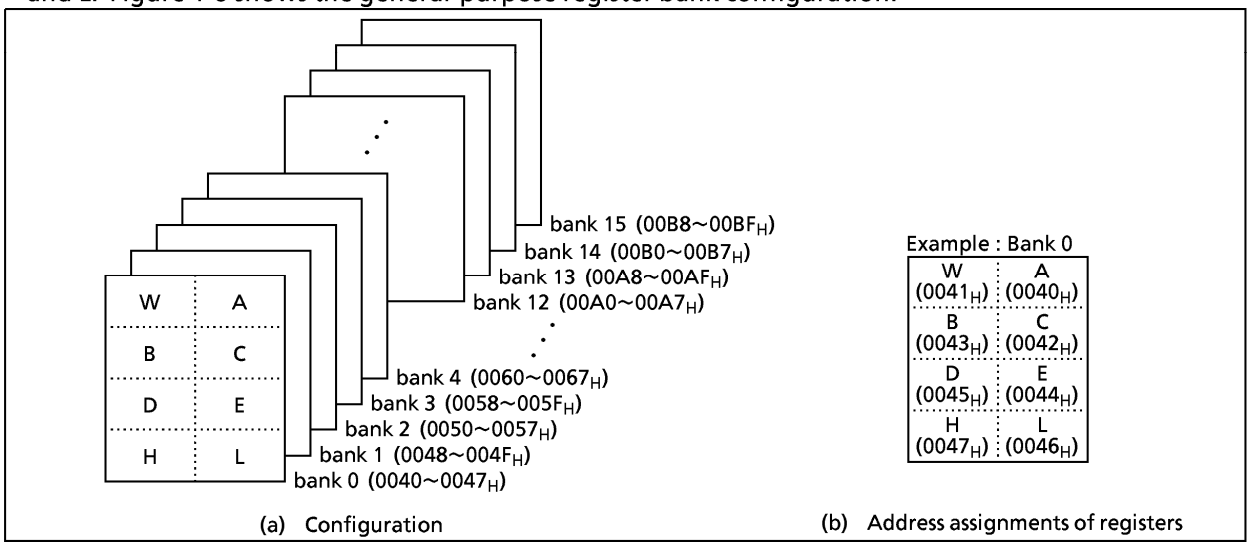

Figure 1-5. General-purpose Register Banks

In addition to access in 8-bit units, the registers can also be accessed in 16-bit units as the register pairs WA, BC, DE, and HL. Besides its function as a general-purpose register, the register also has the following functions:

(1) **A, WA**

The A register functions as an 8-bit accumulator and WA the register pair functions as a 16-bit accumulator (W is high byte and A is low byte). Registers other than A can also be used as accumulators for 8-bit operations.

```
Examples : ①   ADD  A, B       ; Adds B contents to A contents and stores the result into A.
           ②   SUB  WA, 1234H  ; Subtracts 1234H from WA contents and stores the result into WA.
           ③   SUB  E, A       ; Subtracts A contents from E contents, and stores the result into E.
```

(2) **HL, DE**

The HL and DE specify a memory address. The HL register pair functions as data pointer (HL) / index register (HL + d) / base register (HL + C), and the DE register pair function as a data pointer (DE). The HL also has an auto-post- increment and auto-pre-decrement functions. This function simplifies multiple digit data processing, software LIFO (last-in first-out) processing, etc.

```
Example 1 : ①   LD   A, (HL)       ; Loads the memory contents at the address specified by HL into A.
            ②   LD   A, (HL + 52H) ; Loads the memory contents at the address specified by the value
                                     obtained by adding 52H to HL contents into A.
            ③   LD   A, (HL + C)   ; Loads the memory contents at the address specified by the value
                                     obtained by adding the register C contents to HL contents into A.
            ④   LD   A, (HL + )    ; Loads the memory contents at the address specified by HL into A.
                                     Then increments HL.
            ⑤   LD   A, ( – HL)    ; Decrements HL. Then loads the memory contents at the address
                                     specified by new HL into A.
```

The TLCS-870 Series can transfer data directly memory to memory, and operate directly between memory data and memory data. This facilitates the programming of block processing.

Example 2 : Block transfer

```
        LD      B, m          ; m = n – 1 (n : number of bytes to transfer)
        LD      HL, DSTA      ; Sets destination address to HL
        LD      DE, SRCA      ; Sets source address to DE
SLOOP : LD      (HL), (DE)    ; (HL) ← (DE)
        INC     HL            ; HL ← HL + 1
        INC     DE            ; DE ← DE + 1
        DEC     B             ; B ← B – 1
        JRS     F, SLOOP      ; IF B ≧ 0 Then loop
```

(3) **B, C, BC**

Registers B and C can be used as 8-bit buffers or counters, and the BC register pair can be used as a 16-bit buffer or counter. The C register functions as an offset register for register-offset index addressing (refer to example 1 ③ above) and as a divisor register for the division instruction [DIV gg, C].

Example 1 : Repeat processing

```
        LD      B, n          ; Sets n as the number of repetitions to B
SREPEAT : processing                (n + 1 times processing)
        DEC     B
        JRS     F, SREPEAT
```

Example 2 : Unsigned integer division (16-bit ÷ 8-bit)

```
        DIV     WA, C         ; Divides the WA contents by the C contents, places the
                                quotient in A and the remainder in W.
```

The general-purpose register banks are selected by the 4-bit register bank selector (RBS). During reset, the RBS is initialized to "0". The bank selected by the RBS is called the current bank.
Together with the flag, the RBS is assigned to address $003F_H$ in the SFR as the program status word (PSW). There are 3 instructions [LD RBS, n], [PUSH PSW] and [POP PSW] to access the PSW. The PSW can be also operated by the memory access instruction.

Example 1 : Incrementing the RBS

```
        INC     (003FH)       ; RBS ← RBS + 1
```

Example 2 : Reading the RBS

```
        LD      A, (003FH)    ; A ← PSW (A3-0 ← RBS, A7-4 ← Flags)
```

Highly efficient programming and high-speed task switching are possible by using bank changeover to save registers during interrupt and to transfer parameters during subroutine processing.
During interrupt, the PSW is automatically saved onto the stack. The bank used before the interrupt was accepted is restored automatically by executing an interrupt return instruction [RETI]/[RETN] ; therefore, there is no need for the RBS save/restore software processing.
The TLCS-870 Series supports a maximum of 15 interrupt sources. One bank is assigned to the main program, and one bank can be assigned to each source. Also, to increase the efficiency of data memory usage, assign the same bank to interrupt sources which are not nested.

Example: Saving /restoring registers during interrupt task using bank changeover.

```
PINT1 : LD      RBS, n        ; RBS ← n (Bank changeover)
        Interrupt processing
        RETI                  ; Maskable interrupt return (Bank restoring)
```

1.6 Program Status Word (PSW)

The program status word (PSW) consists of a register bank selector (RBS) and four flags, and the PSW is assigned to address $003F_H$ in the SFR.
The RBS can be read and written using the memory access instruction (e. g. [LD A, (003FH)], [LD (003FH), A], however the flags can only be read. When writing to the PSW, the change specified by the instruction is made without writing data to the flags. For example, when the instruction [LD (003FH), 05H] is executed, "5" is written to the RBS and the JF is set to "1", but the other flags are not affected.
[PUSH PSW] and [POP PSW] are the PSW access instructions.

1.6.1 Register Bank Selector (RBS)

The register bank selector (RBS) is a 4-bit register used to select general-purpose register banks. For example, when RBS = 2, bank 2 is currently selected. During reset, the RBS is initialized to "0".

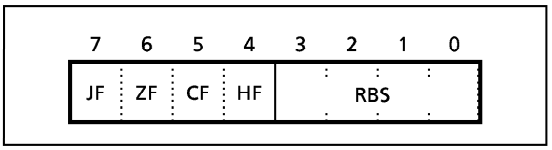

Figure 1-6. PSW (Flags, RBS) Configuration

1.6.2 Flags

The flags are configured with the upper 4 bits : a zero flag, a carry flag, a half carry flag and a jump status flag. The flags are set or cleared under conditions specified by the instruction. These flags except the half carry flag are used as jump condition "cc" for conditional jump instructions [JR cc, $ + 2 + d]/[JRS cc, $ + 2 + d]. After reset, the jump status flag is initialized to "1", other flags are not affected.

(1) **Zero flag (ZF)**

The ZF is set to "1" if the operation result or the transfer data is 00_H (for 8-bit operations and data transfers)/0000_H (for 16-bit operations); otherwise the ZF is cleared to "0".
During the bit manipulation instruction [SET, CLR, and CPL], the ZF is set to "1" if the contents of the specified bit is "0"; otherwise the ZF is cleared to "0".
This flag is set to "1" when the upper 8 bits of the product are 00_H during the multiplication instruction [MUL], and when 00_H for the remainder during the division instruction [DIV]; otherwise it is cleared to "0".

(2) **Carry flag (CF)**

The CF is set to "1" when a carry out of the MSB (most significant bit) of the result occurred during addition or when a borrow into the MSB of the result occurred during subtraction; otherwise the CF is cleared to "0". During division, this flag is set to "1" when the divisor is 00_H (divided by zero error), or when the quotient is 100_H or higher (quotient error); otherwise it is cleared. The CF is also affected during the shift/rotate instructions [SHLC, SHRC, ROLC, and RORC]. The data shifted out from a register is set to the CF.
This flag is also a 1-bit register (a boolean accumulator) for the bit manipulation instructions.
Set/clear/complement are possible with the CF manipulation instructions.

Example1 : Bit manipulation

```
LD      CF, (0007H) . 5      ;  (0001H)2 ← (0007H)5 ∀ (009AH)0
XOR     CF, (009AH) . 0
LD      (0001H) . 2, CF
```

Example2 : Arithmetic right shift

```
LD      CF, A . 7
RORC    A
```

(3) **Half carry flag (HF)**

The HF is set to "1" when a carry occurred between bits 3 and 4 of the operation result during an 8-bit addition, or when a borrow occurred from bit 4 into bit 3 of the result during an 8-bit subtraction; otherwise the HF is cleared to "0". This flag is useful in the decimal adjustment for BCD operations (adjustments using the [DAA r], or [DAS r] instructions).

Example : BCD operation
(The A becomes 47_H after executing the following program when A = 19_H, B = 28_H)

```
ADD     A, B        ; A ← 41H, HF ← 1, CF = 0
DAA     A           ; A ← 41H + 06H = 47H (decimal-adjust)
```

(4) **Jump status flag (JF)**

Zero or carry information is set to the JF after operation (e. g. INC, ADD, CMP, TEST).
The JF provides the jump condition for conditional jump instructions [JRS T/F, $ + 2 + d], [JR T/F, $ + 2 + d] (T or F is a condition code). Jump is performed if the JF is "1" for a true condition (T), or the JF is "0" for a false condition (F).
The JF is set to "1" after executing the load/exchange/swap/nibble rotate/jump instruction, so that [JRS T, $ + 2 + d] and [JR T, $ + 2 + d] can be regarded as an unconditional jump instruction.

Example : Jump status flag and conditional jump instruction

```
INC     A
JRS     T, SLABLE1      ; Jump when a carry is caused by the immediately
  ⋮                       preceding operation instruction.
LD      A, (HL)
JRS     T, SLABLE2      ; JF is set to "1" by the immediately preceding
  ⋮                       instruction, making it an unconditional jump
                          instruction.
```

Example : The accumulator and flags will become as shown below after executing the following instructions when the WA register pair, the HL register pair, the data memory at address $00C5_H$, the carry flag and the half carry flag contents being "$219A_H$", "$00C5_H$", "$D7_H$", "1" and "0", respectively.

Instruction	Acc. after execution	Flag after execution			
		JF	ZF	CF	HF
ADDC A, (HL)	72	1	0	1	1
SUBB A, (HL)	C2	1	0	1	0
CMP A, (HL)	9A	0	0	1	0
AND A, (HL)	92	0	0	1	0
LD A, (HL)	D7	1	0	1	0
ADD A, 66H	00	1	1	1	1

Instruction	Acc. after execution	Flag after execution			
		JF	ZF	CF	HF
INC A	9B	0	0	1	0
ROLC A	35	1	0	1	0
RORC A	CD	0	0	0	0
ADD WA, 0F508H	16A2	1	0	1	0
MUL W, A	13DA	0	0	1	0
SET A.5	BA	1	1	1	0

1.7 Stack and Stack Pointer

1.7.1 Stack

The stack provides the area in which the return address or status, etc. are saved before a jump is performed to the processing routine during the execution of a subroutine call instruction or the acceptance of an interrupt. On a subroutine call instruction, the contents of the PC (the return address) is saved; on an interrupt acceptance, the contents of the PC and the PSW are saved (the PSW is pushed first, followed by PC_H and PC_L). Therefore, a subroutine call occupies two bytes on the stack; an interrupt occupies three bytes.
When returning from the processing routine, executing a subroutine return instruction [RET] restores the contents to the PC from the stack; executing an interrupt return instruction [RETI] / [RETN] restores the contents to the PC and the PSW (the PC_L is popped first, followed by PC_H and PSW).
The stack can be located anywhere within the data memory space except the register bank area, therefore the stack depth is limited only by the free data memory size.

1.7.2 Stack Pointer (SP)

The stack pointer (SP) is a 16-bit register containing the address of the next free locations on the stack.
The SP is postdecremented when a subroutine call or a push instruction is executed, or when an interrupt is accepted; and the SP is preincremented when a return or a pop instruction is executed. Figure 1-8 shows the stacking order.

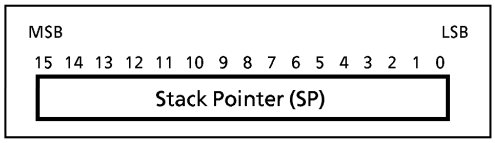

Figure 1-7. Stack Pointer

The SP is not initialized hardware-wise but requires initialization by an initialize routine (sets the highest stack address). [LD SP, mn], [LD SP, gg] and [LD gg, SP] are the SP access instructions (mn ; 16-bit immediate data, gg ; register pair).

Example 1 : To initialize the SP (87CM71/N71/P71)

```
LD      SP, 063FH      ; SP←063F_H
```

Example 2 : To read the SP

```
LD      HL, SP         ; HL←SP
```

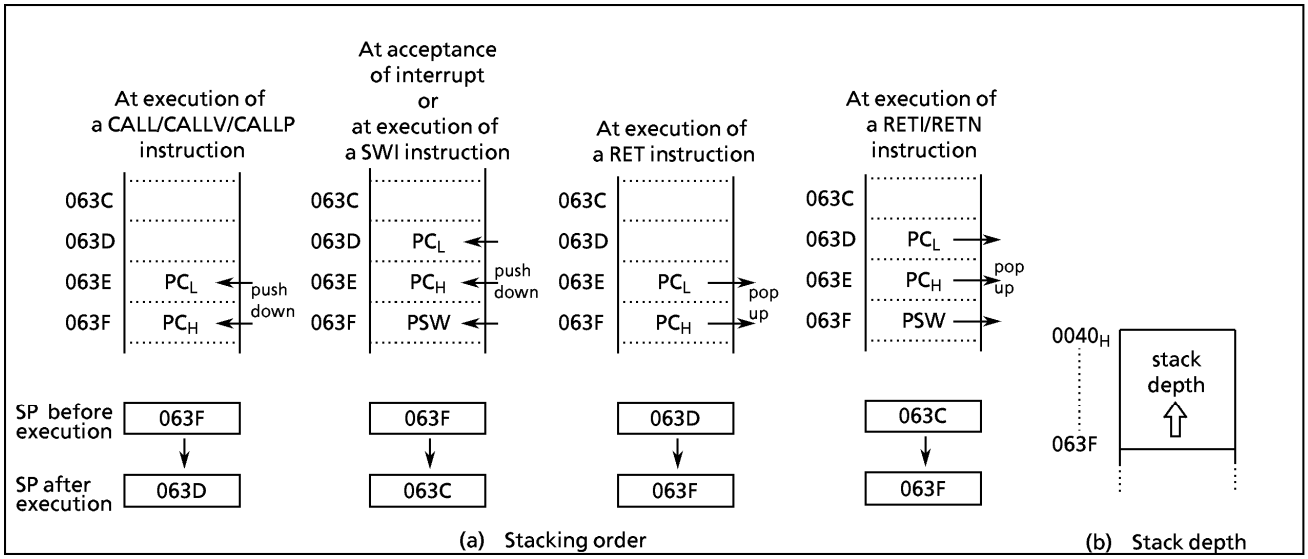

Figure 1-8. Stack

1.8 System Clock Controller

The system clock controller consists of a clock generator, a timing generator, and a stand-by controller.

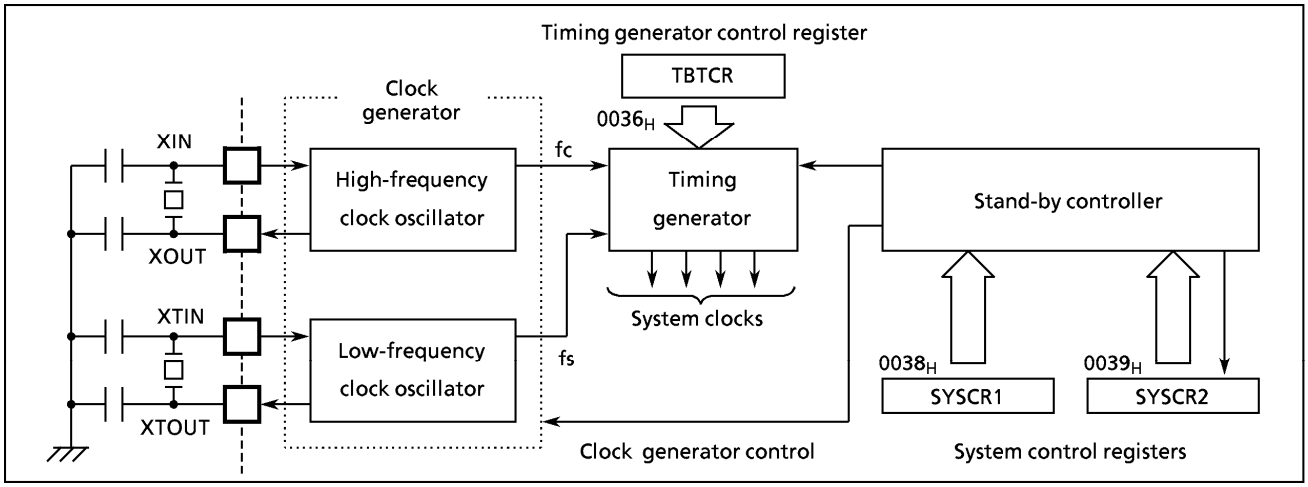

Figure 1-9. System Clock Controller

1.8.1 Clock Generator

The clock generator generates the basic clock which provides the system clocks supplied to the CPU core and on-chip peripheral hardware. It contains two oscillation circuits: one for the high-frequency clock and one for the low-frequency clock. Power consumption can be reduced by switching of the system clock controller to low-power operation based on the low-frequency clock.
The high-frequency (fc) and low-frequency (fs) clocks can be easily obtained by connecting a resonator between the XIN/XOUT and XTIN/XTOUT pins, respectively. Clock input from an external oscillator is also possible. In this case, external clock is applied to the XIN/XTIN pin with the XOUT/XTOUT pin not connected. The 87CM71/N71/P71/S71 are not provided an RC oscillation.

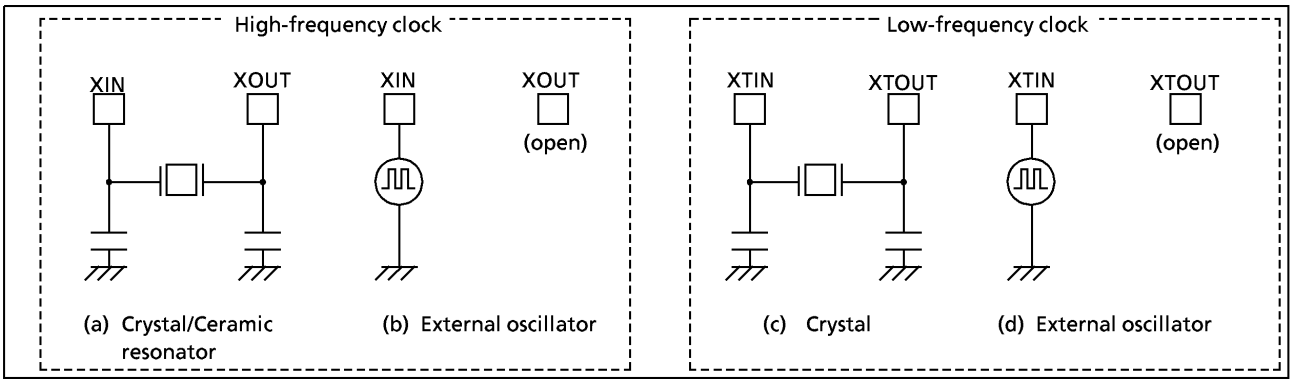

Figure 1-10. Examples of Resonator Connection

Note : Accurate Adjustment of the Oscillation Frequency:
Although no hardware to externally and directly monitor the basic clock pulse is not provided, the oscillation frequency can be adjusted by providing a program to output fixed frequency pulses to the port while disabling all interrupts and monitoring this pulse. With a system requiring adjustment of the oscillation frequency, the adjusting program must be created beforehand.

Example: To output the high-frequency oscillation frequency adjusting monitor pulse to P13 ($\overline{DVO}$) pin.

```
SFCCHK:  LD   (P1CR),   00001000B  ;  Configures port P13 as an output
         SET  (P1).3               ;  P13 output latch ← 1
         LD   (TBTCR),  11100000B  ;  Enables divider output
         JRS  T, $                 ;  Loops endless
```

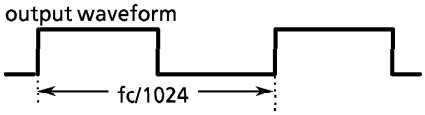

1.8.2 Timing Generator

The timing generator generates from the basic clock the various system clocks supplied to the CPU core and peripheral hardware. The timing generator provides the following functions :

① Generation of main system clock
② Generation of divider output ($\overline{DVO}$) pulses
③ Generation of source clocks for time base timer
④ Generation of source clocks for watchdog timer
⑤ Generation of internal source clocks for timer/counters TC1 – TC4
⑥ Generation of internal clocks for serial interfaces SIO and HSO
⑦ Generation of source clocks for VFT driver circuit
⑧ Generation of warm-up clocks for releasing STOP mode
⑨ Generation of a clock for releasing reset output

(1) Configuration of Timing Generator

The timing generator consists of a 21-stage divider with a divided-by-4 prescaler, a main system clock generator, and machine cycle counters. An input clock to the 7th stage of the divider depends on

the operating mode and DV7CK (bit 4 in TBTCR) shown in Figure 1-11 as follows.
During reset and upon releasing STOP mode, the divider is cleared to "0", however, the prescaler is not cleared.

① In the single-clock mode
A divided-by-256 of high-frequency clock (fc/2^8) is input to the 7th stage of the divider.

② In the dual-clock mode
During NORMAL2 or IDLE2 mode (SYSCK = 0), an input clock to the 7th stage of the divider can be selected either "fc/2^8" or "fs" with DV7CK.
During SLOW or SLEEP mode (SYSCK = 1), "fs" is automatically input to the 7th stage. To input clock to the 1st stage is stopped ; output from the 1st to 6th stages is also stopped.

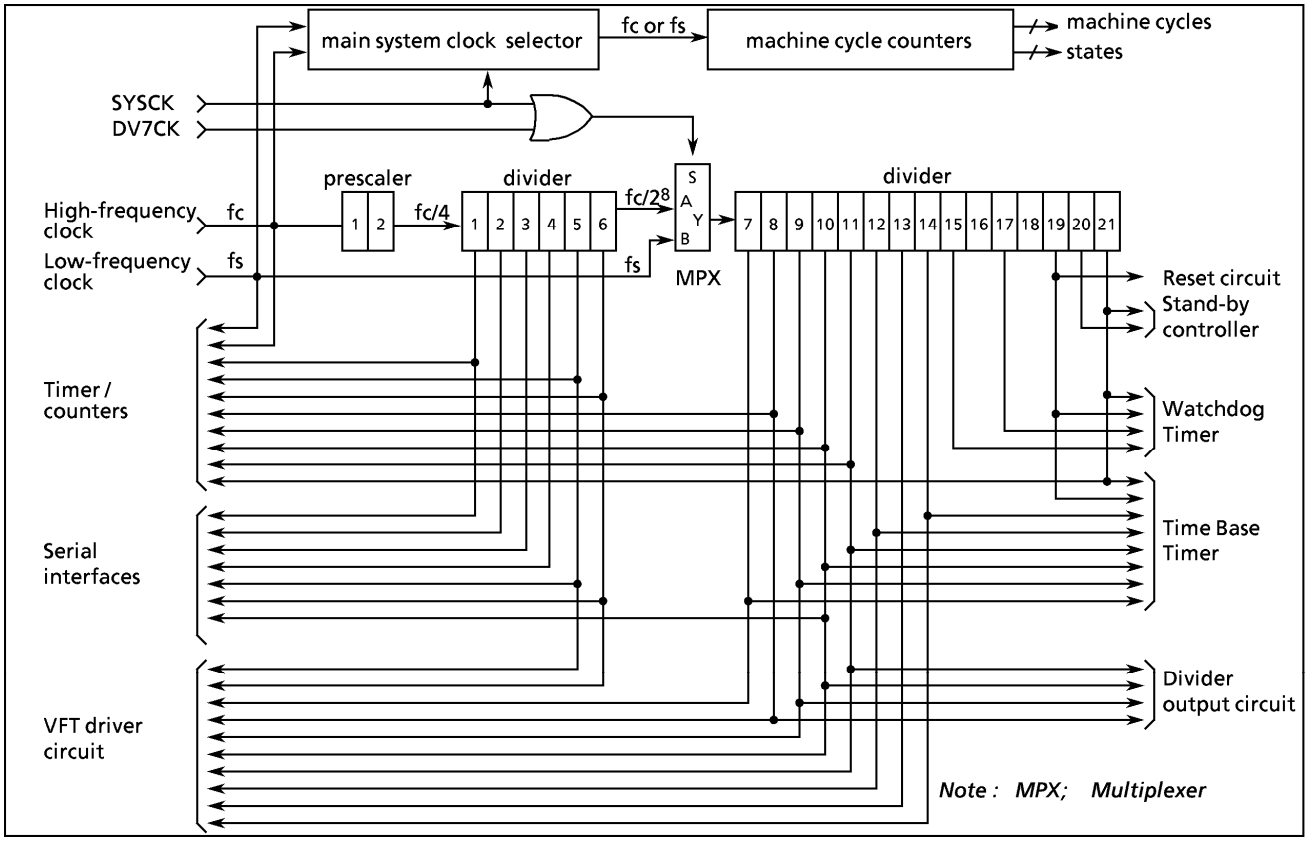

Figure 1-11. Configuration of Timing Generator

TBTCR (0036_H)

7	6	5	4	3	2	1	0
(DVOEN)	(DVOCK)		**DV7CK**	(TBTEN)	(TBTCK)		

(Initial value: 0**0 0***)

DV7CK	Selection of input clock to the 7th stage of the divider	0 : fc/2^8 [Hz] 1 : fs	write only

*Note1 : fc ; high-frequency clock [Hz], fs ; low-frequency clock [Hz], * ; don't care*
Note 2 : Do not set DV7CK to "1" in the single-clock mode.
Note 3 : Do not set DV7CK to "1" before low-frequency clock is stable in the dual-clock mode.

Figure 1-12. Timing Generator Control Register

(2) Machine Cycle

Instruction execution and on-chip peripheral hardware operation are synchronized with the main system clock. The minimum instruction execution unit is called an "machine cycle". There are a total of 10 different types of instructions for the TLCS-870 Series: ranging from 1-cycle instructions which require one machine cycle for execution to 10-cycle instructions which require 10 machine cycles forexecution.
A machine cycle consists of 4 states (S0 - S3), and each state consists of one main system clock.

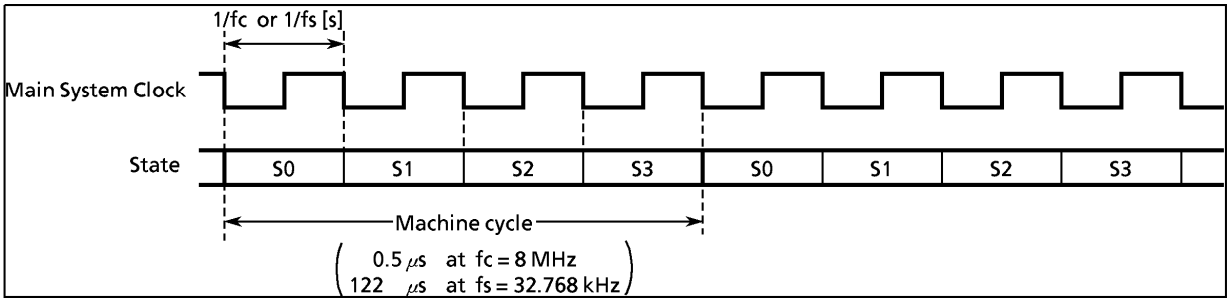

Figure 1-13. Machine Cycle

1.8.3 Stand-by Controller

The stand-by controller starts and stops the oscillation circuits for the high-frequency and low-frequency clocks, and switches the main system clock. There are two operating modes: single-clock and dual-clock. These modes are controlled by the system control registers (SYSCR1, SYSCR2).

Figure 1-14 shows the operating mode transition diagram and Figure 1-15 shows the system control registers. Either the single-clock or the dual-clock mode can be selected by an option during reset.

(1) **Single-clock mode**

Only the oscillation circuit for the high-frequency clock is used, and P21 (XTIN) and P22 (XTOUT) pins are used as input/output ports. In the single-clock mode, the machine cycle time is 4/fc [s] (0.5 μs at fc = 8 MHz).

① NORMAL1 mode

In this mode, both the CPU core and on-chip peripherals operate using the high-frequency clock. In the case where the single-clock mode has been selected as an option, the 87CM71/N71/P71/S71 are placed in this mode after reset.

② IDLE1 mode

In this mode, the internal oscillation circuit remains active. The CPU and the watchdog timer are halted; however, on-chip peripherals remain active (operate using the high-frequency clock). IDLE1 mode is started by setting IDLE bit in the system control register 2 (SYSCR2), and IDLE1 mode is released to NORMAL1 mode by an interrupt request from the on-chip peripherals or external interrupt inputs. When IMF (interrupt master enable flag) is "1" (interrupt enable), the execution will resume upon acceptance of the interrupt, and the operation will return to normal after the interrupt service is completed. When IMF is "0" (interrupt disable), the execution will resume with the instruction which follows IDLE mode start instruction.

③ STOP1 mode

In this mode, the internal oscillation circuit is turned off, causing all system operations to be halted. The internal status immediately prior to the halt is held with the lowest power consumption during this mode. The output status of all output ports can be set to either output hold or high-impedance under software control.

STOP1 mode is started by setting STOP bit in the system control register 1 (SYSCR1), and STOP1 mode is released by an input (either level-sensitive or edge-sensitive can be programmably selected) to the $\overline{STOP}$ pin. After the warming-up period is completed, the execution resumes with the next instruction which follows the STOP mode start instruction.

(2) **Dual-clock mode**

Both the high-frequency and low-frequency oscillation circuits are used in this mode. P21 (XTIN) and P22 (XTOUT) pins cannot be used as input/output ports. The main system clock is obtained from the high-frequency clock in NORMAL2 and IDLE2 modes, and is obtained from the low-frequency clock in SLOW and SLEEP modes. The machine cycle time is 4/fc [s] (0.5 μs at fc = 8 MHz) in NORMAL2 and IDLE2 modes, and 4/fs [s] (122 μs at fs = 32.768 kHz) in SLOW and SLEEP modes.

Note : 87PP71 and 87PS71 are placed in the single-clock mode during reset. To use the dual-clock mode, the low-frequency oscillator should be turned on by executing [SET (SYSCR2). XTEN] instruction.

① NORMAL2 mode

In this mode, the CPU core is operated using the high-frequency clock. The on-chip peripherals are operated on the high-frequency clock and/or low-frequency clock. In case that the dual-clock mode has been selected as an option, the 87CM71/N71/P71/S71 are placed in this mode after reset.

② SLOW mode

This mode can be used to reduce power-consumption by turning off oscillation of the high-frequency clock. The CPU core and on-chip peripherals are operated using the low-frequency clock.

Switching back and forth between NORMAL2 and SLOW modes is performed by the system control register 2.

③ IDLE2 mode

In this mode, the internal oscillation circuits remain active. The CPU and the watchdog timer are halted; however, on-chip peripherals operate using the high-frequency clock and/or the low-frequency clock. Starting and releasing of IDLE2 mode are the same as for IDLE1 mode, except that operation returns to NORMAL2 mode.

④ SLEEP mode

In this mode, the internal oscillation circuit of the low-frequency clock remains active. The CPU, the watchdog timer, and the internal oscillation circuit of the high- frequency clock are halted; however, on-chip peripherals operate using the low-frequency clock. Starting and releasing of SLEEP mode is the same as for IDLE1 mode, except that operation returns to SLOW mode.

⑤ STOP2 mode

As in STOP1 mode, all system operations are halted in this mode.

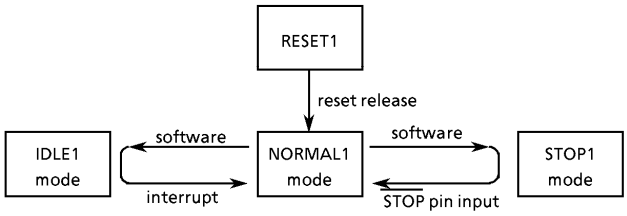

(a) Single-clock mode

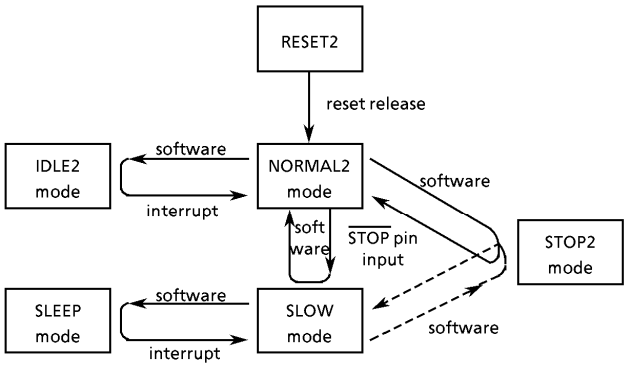

(b) Dual-clock mode

Note 1 : NORMAL1 and NORMAL2 modes are generically called NORMAL; STOP1 and STOP2 are called STOP; and IDLE1, IDLE2 and SLEEP are called IDLE.
Note 2 : The 87PP71/PS71 don't have RESET2 mode.

Operating mode		Frequency		CPU core	On-chip Peripherals	Machine cycle time
		High-frequency	Low-frequency			
Single-Clock	RESET1	turning on oscillation	turning off oscillation	reset	reset	4/fc [s]
	NORMAL1			operate	operate (Note 1)	
	IDLE1			halt		
	STOP1	turning off oscillation			halt	—
Dual-Clock	RESET2	turning on oscillation	turning on oscillation	reset	reset	4/fc [s]
	NORMAL2			High-frequency	operate (High and/or Low) (Note 1)	
	IDLE2			halt		
	SLOW	turning off oscillation		Low-frequency	Low-frequency (Note 2)	4/fs [s]
	SLEEP			halt		
	STOP2		turning off oscillation		halt	—

Note 1: The High-Speed Serial Output and the Comparator inputs are halted in IDLE1/IDLE2 mode because CPU core is halted.
Note 2: The Vacuum Fluorescent Tube driver circuit and the High Speed Serial Output and the Comparator inputs are halted.

Figure 1-14. Operating Mode Transition Diagram

System Control Register 1

SYSCR1 (0038_H)

7	6	5	4	3	2	1	0
STOP	RELM	RETM	OUTEN	WUT			

(Initial value: 0000 00**)

STOP	STOP mode start	0 : CPU core and peripherals remain active 1 : CPU core and peripherals are halted (start STOP mode)	R/W
RELM	Release method for STOP mode	0 : Edge-sensitive release 1 : Level-sensitive release	
RETM	Operating mode after STOP mode	0 : Return to NORMAL mode 1 : Return to SLOW mode	
OUTEN	Port output control during STOP mode	0 : High-impedance 1 : Remain unchanged	
WUT	Warming-up time at releasing STOP mode	00 : 3×2^{19} / fc or 3×2^{13} / fs [s] 01 : 2^{19} / fc or 2^{13} / fs 1* : Reserved	

Note 1 : Always set RETM to "0" when transiting from NORMAL1 mode to STOP1 mode and from NORMAL2 mode to STOP2 mode. Always set RETM to "1" when transiting from SLOW mode to STOP2 mode.

Note 2 : When STOP mode is released with $\overline{\text{RESET}}$ pin input, a return is made to NORMAL mode regardless of the RETM contents.

Note 3 : fc ; high-frequency clock [Hz]
fs ; low-frequency clock [Hz]
**; don't care*

Note 4 : Bits 1 and 0 in SYSCR1 are read in as undefined data when a read instruction is executed.

Note 5 : When the STOP mode is started by specifying OUTEN = "0", the internal input of port is fixed to "0" and the interrupt of the falling edge may be set.

System Control Register 2

SYSCR2 (0039_H)

7	6	5	4	3	2	1	0
XEN	XTEN	SYSCK	IDLE				

(Initial value: 10/100 ****)

XEN	High-frequency oscillator control	0 : Turn off oscillation 1 : Turn on oscillation	R/W
XTEN	Low-frequency oscillator control	0 : Turn off oscillation 1 : Turn on oscillation	
SYSCK	Main system clock select (write)/main system clock monitor (read)	0 : High-frequency clock 1 : Low-frequency clock	
IDLE	IDLE mode start	0 : CPU and watchdog timer remain active 1 : CPU and watchdog timer are stopped (start IDLE mode)	

Note 1 : A reset is applied ($\overline{\text{RESET}}$ pin output goes low) if both XEN and XTEN are cleared to "0".

Note 2 : Do not clear XEN to "0" when SYSCK = 0, and do not clear XTEN to "0" when SYSCK = 1.

*Note 3 : WDT; watchdog timer, * ; don't care*

Note 4 : Bits 3 - 0 in SYSCR2 are always read in as "1" when a read instruction is executed.

Note 5 : An optional initial value can be selected for XTEN. Always specify when ordering ES (engineering sample).

XTEN	operating mode after reset
0	Single-clock mode (NORMAL1)
1	Dual-clock mode (NORMAL2)

Note 6 : The instruction for specifying Masking Option (Operating Mode) in ES Order Sheet is described in ADDITIONAL INFORMATION "Notice for Masking Option of TLCS-870 series" section 8.

Figure 1-15. System Control Registers

1.8.4 Operating Mode Control

(1) **STOP** mode (STOP1, STOP2)

STOP mode is controlled by the system control register 1 (SYSCR1) and the $\overline{STOP}$ pin input. The $\overline{STOP}$ pin is also used both as a port P20 and an $\overline{INT5}$ (external interrupt input 5) pin. STOP mode is started by setting STOP (bit 7 in SYSCR1) to "1". During STOP mode, the following status is maintained.

① Oscillations are turned off, and all internal operations are halted.

② The data memory (except for DBR), registers and port output latches are all held in the status in effect before STOP mode was entered. The port output can be select either output hold or high-impedance by setting OUTEN (bit 4 in SYSCR1).

③ The divider of the timing generator is cleared to "0".

④ The program counter holds the address of the instruction following the instruction which started STOP mode.

STOP mode includes a level-sensitive release mode and an edge-sensitive release mode, either of which can be selected with RELM (bit 6 in SYSCR1).

a. Level-sensitive release mode (RELM = 1)

In this mode, STOP mode is released by setting the $\overline{STOP}$ pin high. This mode is used for capacitor back-up when the main power supply is cut off and for long term battery back-up.

When the $\overline{STOP}$ pin input is high, executing an instruction which starts the STOP mode will not place in the STOP mode but instead will immediately start the release sequence (warm-up). Thus, to start the STOP mode in the level-sensitive release mode, it is necessary for the program to first confirm that the $\overline{STOP}$ pin input is low. The following method can be used for confirmation:

- Using an external interrupt input $\overline{INT5}$ ($\overline{INT5}$ is a falling edge-sensitive input).

Example : Starting STOP mode with an INT5 interrupt.

```
PINT5 :   TEST   (P2) . 0                  ; To reject noise, STOP mode does not start if
          JRS    F, SINT5                    port P20 is at high
          LD     (SYSCR1), 01000000B       ; Sets up the level-sensitive release mode.
          SET    (SYSCR1) . 7              ; Starts STOP mode
          LDW    (IL), 1111011101010111B   ; IL11, 7, 5, 3 ← 0 (clears interrupt latches)
SINT5 :   RETI
```

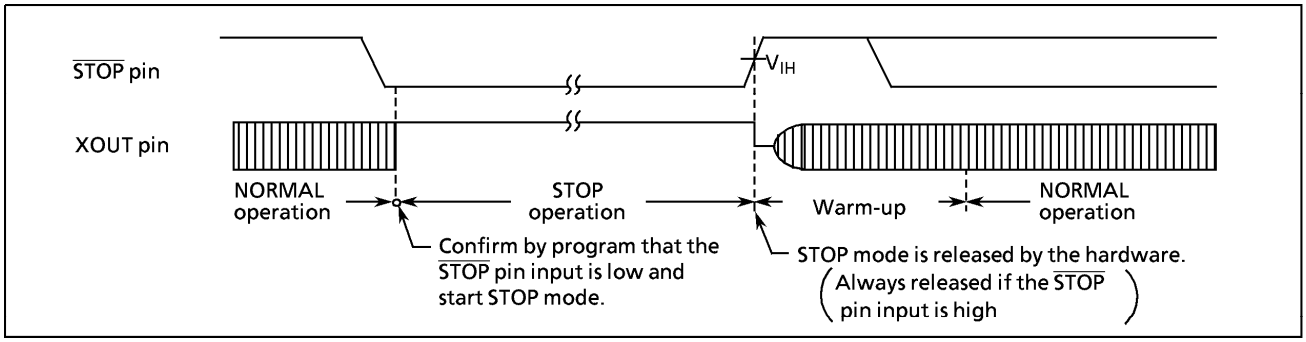

Figure 1-16. Level-sensitive Release Mode

Note1 : After warm-up start, even if $\overline{STOP}$ pin input is low again, STOP mode does not restart.

Note2 : When changing to the level-sensitive release mode from the edge-sensitive release mode, the release mode is not switched until a rising edge of the STOP pin input is detected.

b. Edge-sensitive release mode (RELM = 0)

In this mode, STOP mode is released by a rising edge of the $\overline{STOP}$ pin input. This is used in applications where a relatively short program is executed repeatedly at periodic intervals. This periodic signal (for example, a clock from a low-power consumption oscillator) is input to the $\overline{STOP}$ pin.

In the edge-sensitive release mode, STOP mode is started even when the $\overline{STOP}$ pin input is high.

Example : Starting STOP mode operation in the edge-sensitive release mode

```
LD      (SYSCR1), 00000000B      ; OUTEN ← 0 (specifies high-impedance)
DI                               ; IMF ← 0 (disables interrupt service)
SET     (SYSCR1). STOP           ; STOP ← 1 (activates stop mode)
LDW     (IL), 1111011101010111B  ; IL11, 7, 5, 3 ← 0
                                   (clears interrupt latches)
EI                               ; IMF ← 1 (enables interrupt service)
```

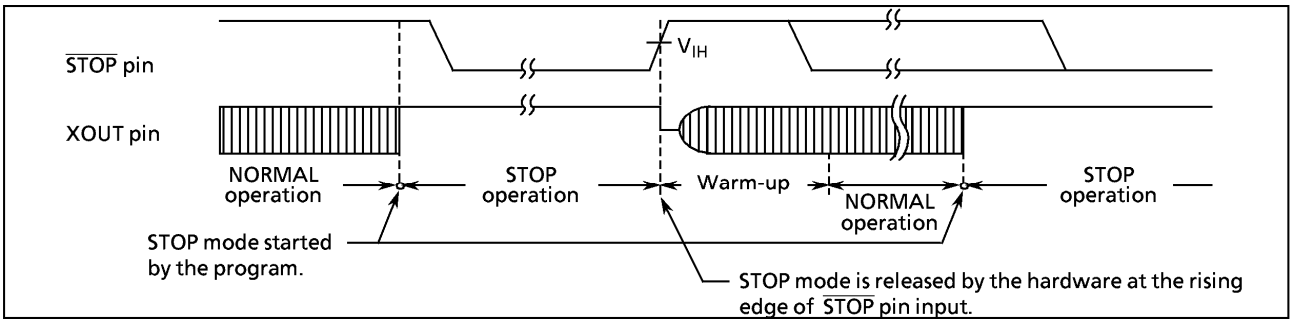

Figure 1-17. Edge-sensitive Release Mode

STOP mode is released by the following sequence:

① When returning to NORMAL 2, both the high-frequency and low-frequency clock oscillators are turned on ; when returning to SLOW mode, only the low-frequency clock oscillator is turned on. When returning to NORMAL 1, only the high-frequency clock oscillator is turned on.

② A warming-up period is inserted to allow oscillation time to stabilize. During warm-up, all internal operations remain halted. Two different warming-up times can be selected with WUT (bits 2 and 3 in SYSCR1) as determined by the resonator characteristics.

③ When the warming-up time has elapsed, normal operation resumes with the instruction following the STOP mode start instruction (e.g. [SET (SYSCR1). 7]). The start is made after the divider of the timing generator is cleared to "0".

Table 1-1. Warming-up Time Example

Return to NORMAL1 mode			Return to SLOW mode	
WUT	At fc = 4.194304 MHz	At fc = 8 MHz	WUT	At fs = 32.768 kHz
3×2^{19} / fc [s]	375 [ms]	196.6 [ms]	3×2^{13} / fs [s]	750 [ms]
2^{19} / fc	125	65.5	2^{13} / fs	250

Note : The warming-up time is obtained by dividing the basic clock by the divider: therefore, the warming-up time may include a certain amount of error if there is any fluctuation of the oscillation frequency when STOP mode is released. Thus, the warming-up time must be considered an approximate value.

STOP mode can also be released by setting the $\overline{RESET}$ pin low, which immediately performs the normal reset operation. In this case, even if the setting is to return to the SLOW mode, it starts from the NORMAL mode. (If the initial XTEN of 87CM71/N71/P71/S71 are set to "1" by mask option, they start from the NORMAL2 mode. In case of 87PP71/PS71, starts from NORMAL1 mode.)

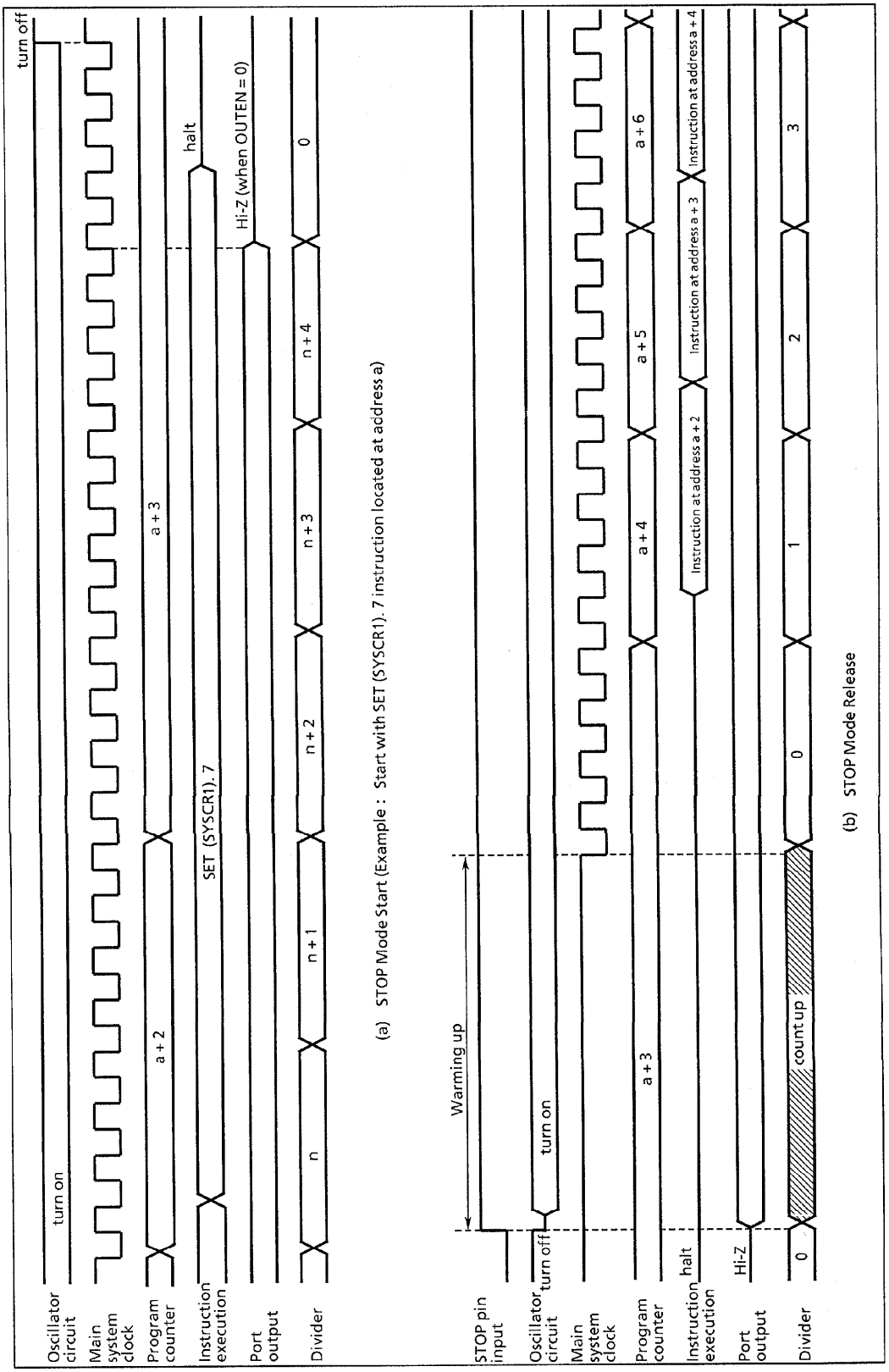

Figure 1-18. STOP Mode Start / Release

Note : When STOP mode is released with a low hold voltage, the following cautions must be observed.
The power supply voltage must be at the operating voltage level before releasing the STOP mode. The $\overline{\text{RESET}}$ pin input must also be high, rising together with the power supply voltage. In this case, if an external time constant circuit has been connected, the $\overline{\text{RESET}}$ pin input voltage will increase at a slower rate than the power supply voltage. At this time, there is a danger that a reset may occur if input voltage level of the $\overline{\text{RESET}}$ pin drops below the non-inverting high-level input voltage (hysteresis input).

(2) **IDLE** mode (IDLE1, IDLE2, SLEEP)

IDLE mode is controlled by the system control register 2 and maskable interrupts. The following status is maintained during IDLE mode.

① Operation of the CPU and watchdog timer is halted. The on-chip peripherals continue to operate.
② The data memory, CPU registers and port output latches are all held in the status in effect before IDLE mode was entered.
③ The program counter holds the address of the instruction following the instruction which started IDLE mode.

Example : Starting IDLE mode.

```
SET        (SYSCR2) . 4        ;  IDLE←1
```

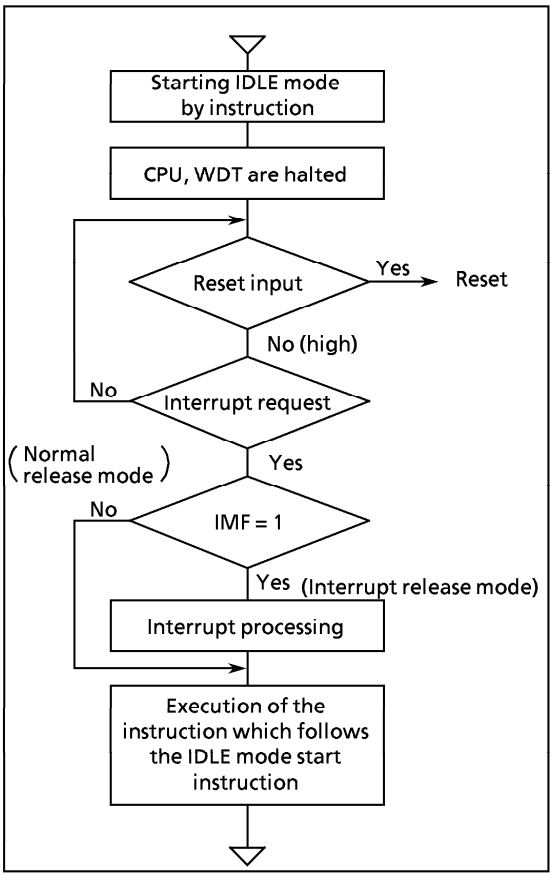

Figure 1-19. IDLE Mode

IDLE mode includes a normal release mode and an interrupt release mode. Selection is made with the interrupt master enable flag (IMF). Releasing the IDLE mode returns from IDLE1 to NORMAL1, from IDLE2 to NORMAL2, and from SLEEP to SLOW mode.

a. Normal release mode (IMF = "0")

IDLE mode is released by any interrupt source enabled by the individual interrupt enable flag (EF) or an external interrupt 0 ($\overline{\text{INT0}}$ pin) request. Execution resumes with the instruction following the IDLE mode start instruction (e.g. [SET (SYSCR2).4]).

The interrupt latch (IL) of the interrupt source for releasing the IDLE mode must be cleared to "0" by load instruction.

b. Interrupt release mode (IMF = "1")

IDLE mode is released and interrupt processing is started by any interrupt source enabled with the individual interrupt enable flag (EF) or an external interrupt 0 ($\overline{\text{INT0}}$ pin) request. After the interrupt is processed, the execution resumes from the instruction following the instruction which started IDLE mode.

IDLE mode can also be released by setting the $\overline{\text{RESET}}$ pin low, which immediately performs the reset operation. After reset, the 87CM71/N71/P71/S71 are placed in NORMAL mode.
The 87PP71/PS71 are placed in NORMAL1 mode after reset release.

Note : When a watchdog timer interrupt is generated immediately before IDLE mode is started, the watchdog timer interrupt will be processed but IDLE mode will not be started.

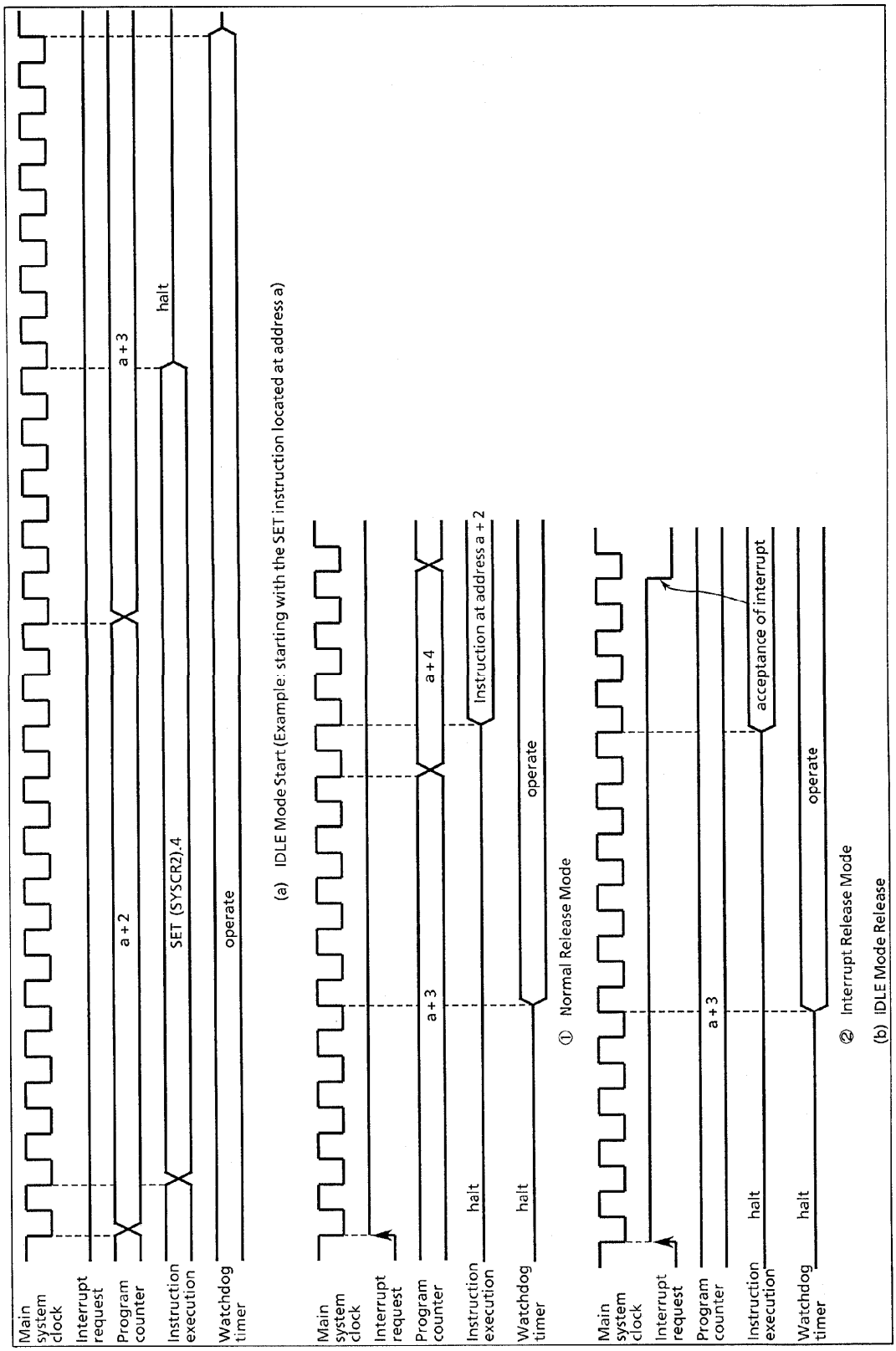

Figure 1-20. IDLE Mode Start/Release

(3) **SLOW** mode

SLOW mode is controlled by the system control register 2 and the timer/counter 2.

a. Switching from NORMAL2 mode to SLOW mode

First, set SYSCK (bit 5 in SYSCR2) to switch the main system clock to the low-frequency clock. Next, clear XEN (bit 7 in SYSCR2) to turn off high-frequency oscillation.

Note : The high frequency clock can be continued oscillation in order to return to NORMAL2 mode from SLOW mode quickly. Always turn off oscillation of high frequency clock when switching from SLOW mode to STOP mode.

When the low-frequency clock oscillation is unstable, wait until oscillation stabilizes before performing the above operations. The timer/counter 2 (TC2) can conveniently be used to confirm that low-frequency clock oscillation has stabilized.

Example1 : Switching from NORMAL2 mode to SLOW mode.

```
        SET     (SYSCR2) . 5      ; SYSCK←1   (Switches the main system clock to the
                                                low-frequency clock)
        CLR     (SYSCR2) . 7      ; XEN←0     (turns off high-frequency oscillation)
```

Example2 : Switching to SLOW mode after low-frequency clock oscillation has stabilized.

```
        LD      (TC2CR), 14H      ; Sets TC2 mode
                                    (timer mode, source clock : fs)
        LDW     (TREG2), 8000H    ; Sets warming-up time
                                    (according to Xtal characteristics)
        SET     (EIRH). EF14      ; Enable INTTC2
        LD      (TC2CR), 34H      ; Starts TC2

PINTTC2 :
        LD      (TC2CR), 10H      ; Stops TC2
        SET     (SYSCR2) . 5      ; SYSCK←1
        CLR     (SYSCR2) . 7      ; XEN←0
        RETI

VINTTC2 :
        DW      PINTTC2           ; INTTC2 vector table
```

b. Switching from SLOW mode to NORMAL2 mode

First, set XEN (bit 7 in SYSCR2) to turn on the high-frequency oscillation. When time for stabilization (warm-up) has been taken by the timer/counter 2 (TC2), clear SYSCK (bit 5 in SYSCR2) to switch the main system clock to the high-frequency clock.

Note1 : After the SYSCK is cleared to "0", the CPU core operate using low frequency clock when the main system clock is switching from low frequency clock to high frequency clock.

Note2 : SLOW mode can also be released by setting the $\overline{\text{RESET}}$ pin low, which immediately performs the reset operation. After reset, the 87CM71/N71/P71/S71 are placed in NORMAL2 mode. (The PP71/PS71 are placed in NORMAL1 mode)

Example : Switching from SLOW mode to NORMAL2 mode (fc = 8 MHz, warming-up time is about 7.9 ms).

```
            SET     (SYSCR2) . 7        ; XEN←1     (turns on high-frequency oscillation)
            LD      (TC2CR), 10H        ; Sets TC2 mode
                                        (timer mode, source clock: fc)
            LD      (TREG2 + 1), 0F8H   ; Sets the warming-up time
                                        (according to frequency and resonator characteristics)
            SET     (EIRN). EF14        ; Enable INTTC2
            LD      (TC2CR), 30H        ; Starts TC2

PINTTC2 :   LD      (TC2CR), 10H        ; Stops TC2
            CLR     (SYSCR2) . 5        ; SYSCK←0   (Switches the main system clock to the
                                                     high-frequency clcok)
            RETI

VINTTC2 :   DW      PINTTC2             ; INTTC2 vector table
```

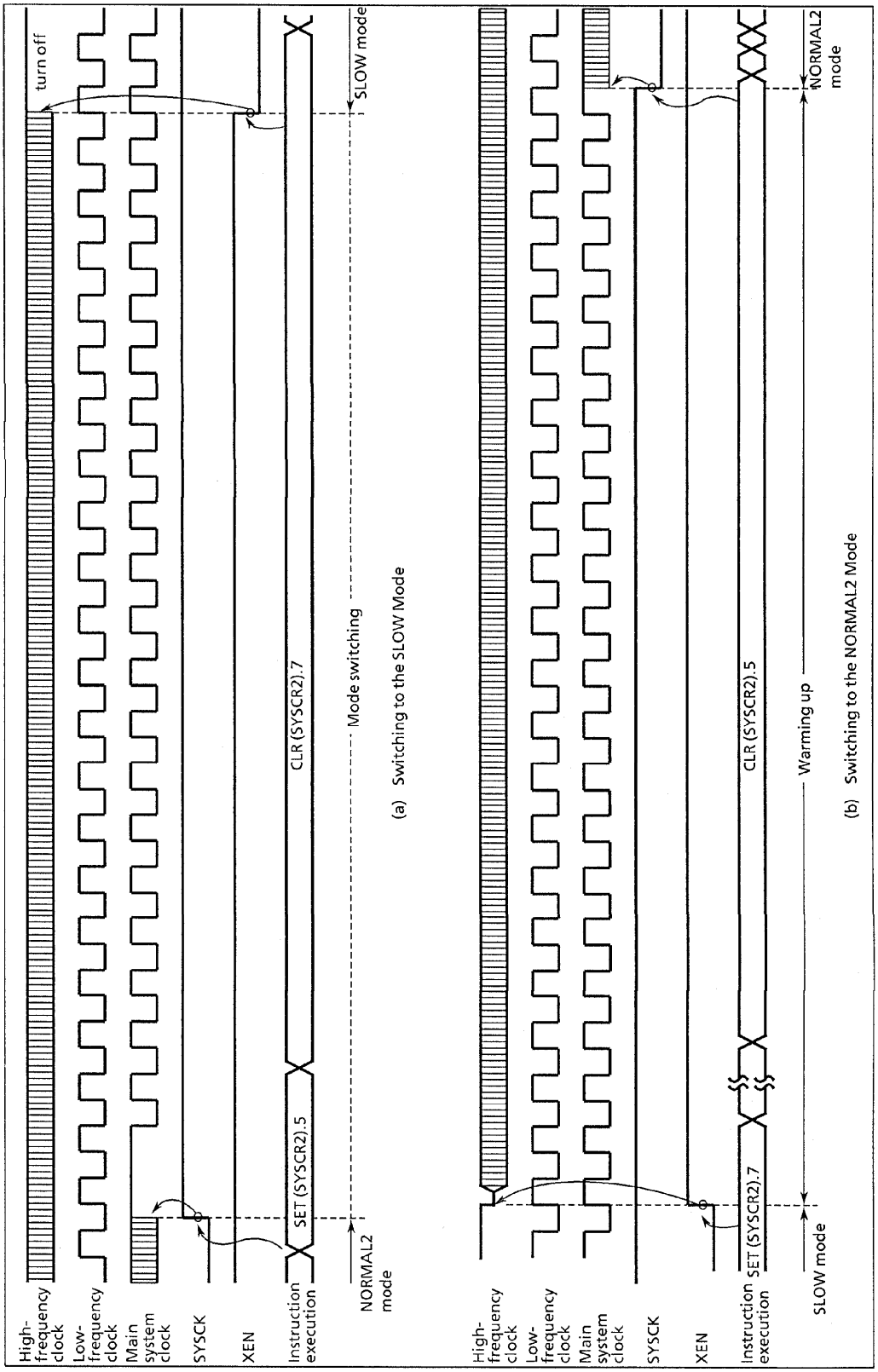

Figure 1-21. Switching between the NORMAL2 and SLOW Modes

1.9 Interrupt Controller

The 87CM71/N71/P71/S71 each have a total of 14 interrupt sources: 5 externals and 9 internals. Nested interrupt control with priorities is also possible. Two of the internal sources are pseudo non-maskable interrupts; the remainder are all maskable interrupts.

Interrupt latches (IL) that hold the interrupt requests are provided for interrupt sources. Each interrupt vector is independent.

The interrupt latch is set to "1" when an interrupt request is generated and requests the CPU to accept the interrupt. The acceptance of maskable interrupts can be selectively enabled and disabled by the program using the interrupt master enable flag (IMF) and the individual interrupt enable flags (EF). When two or more interrupts are generated simultaneously, the interrupt is accepted in the highest priority order as determined by the hardware. Figure 1-22 shows the interrupt controller.

Table 1-2. Interrupt Sources

Interrupt Source			Enable Condition	Interrupt Latch	Vector Table Address	Priority
Internal/ External	(Reset)		Non-Maskable	—	$FFFE_H$	High 0
Internal	INTSW	(Software interrupt)	Pseudo non-maskable	—	$FFFC_H$	1
Internal	INTWDT	(Watchdog Timer interrupt)		IL_2	$FFFA_H$	2
External	INT0	(External interrupt 0)	IMF = 1, INT0EN = 1	IL_3	$FFF8_H$	3
Internal	INTTC1	(16-bit TC1 interrupt)	$IMF \cdot EF_4 = 1$	IL_4	$FFF6_H$	4
External	INT1	(External interrupt 2)	$IMF \cdot EF_5 = 1$	IL_5	$FFF4_H$	5
Internal	INTTBT	(Time Base Timer interrupt)	$IMF \cdot EF_6 = 1$	IL_6	$FFF2_H$	6
External	INT2	(External interrupt 2)	$IMF \cdot EF_7 = 1$	IL_7	$FFF0_H$	7
Internal	INTTC3	(8-bit TC3 interrupt)	$IMF \cdot EF_8 = 1$	IL_8	$FFEE_H$	8
Internal	INTSIO	(Serial Interface interrupt)	$IMF \cdot EF_9 = 1$	IL_9	$FFEC_H$	9
Internal	INTTC4	(8-bit TC4 interrupt)	$IMF \cdot EF_{10} = 1$	IL_{10}	$FFEA_H$	10
External	INT3	(External interrupt 3)	$IMF \cdot EF_{11} = 1$	IL_{11}	$FFE8_H$	11
Internal	INTKEY	(Key scan interrupt)	$IMF \cdot EF_{12} = 1$	IL_{12}	$FFE6_H$	12
		reserved	$IMF \cdot EF_{13} = 1$	IL_{13}	$FFE4_H$	13
Internal	INTTC2	(16-bit TC2 interrupt)	$IMF \cdot EF_{14} = 1$	IL_{14}	$FFE2_H$	14
External	INT5	(External interrupt 5)	$IMF \cdot EF_{15} = 1$	IL_{15}	$FFE0_H$	Low 15

(1) **Interrupt Latches** ($IL_{15 \text{ to } 2}$)

Interrupt latches are provided for each source, except for a software interrupt. The latch is set to "1" when an interrupt request is generated, and requests the CPU to accept the interrupt. The latch is cleared to "0" just after the interrupt is accepted. All interrupt latches are initialized to "0" during reset.

The interrupt latches are assigned to addresses $003C_H$ and $003D_H$ in the SFR. Each latch can be cleared to "0" individually by an instruction; however, *the read-modify-write instruction such as bit manipulation or operation instructions cannot be used (Do not clear the IL_2 for a watchdog timer interrupt to "0").* Thus, interrupt requests can be canceled and initialized by the program. Note that interrupt latches cannot be set to "1" by any instruction.

The contents of interrupt latches can be read out by an instruction. Therefore, testing interrupt requests by software is possible.

Example 1 : Clears interrupt latches

```
LDW      (IL), 1110100000111111B      ; IL12, IL10~IL6←0
```

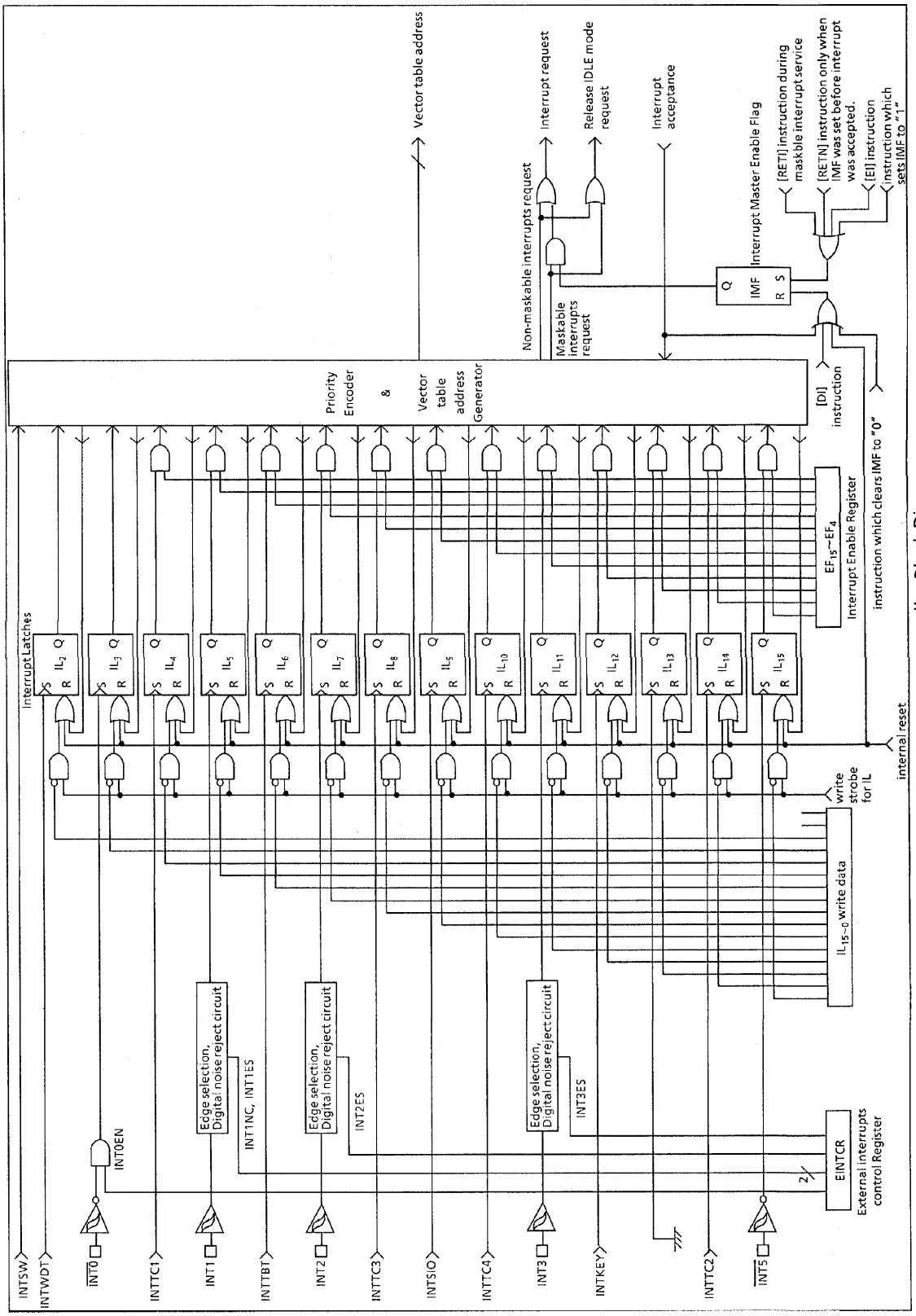

Figure 1-22. Interrupt Controller Block Diagram

Example 2 : Reads interrupt latches

```
LD      WA, (IL)        ; W←IL_H, A←IL_L
```

Example 3: Tests an interrupt latch

```
TEST    (IL).7          ; if IL_7 = 1 then jump
JR      F, SSET
```

(2) **Interrupt Enable Register** (EIR)

The interrupt enable register (EIR) enables and disables the acceptance of interrupts, except for the pseudo non-maskable interrupts (software and watchdog timer interrupts). Pseudo non-maskable interrupts are accepted regardless of the contents of the EIR; however, the pseudo non-maskable interrupts cannot be nested more than once at the same time. For example, the watchdog timer interrupt is not accepted during the software interrupt service.

The EIR consists of an interrupt master enable flag (IMF) and the individual interrupt enable flags (EF). This register is assigned to addresses $003A_H$ and $003B_H$ in the SFR, and can be read and written by an instruction (including read-modify-write instructions such as bit manipulation instructions).

① **Interrupt Master enable Flag** (IMF)

The interrupt master enable flag (IMF) enables and disables the acceptance of all interrupts, except for pseudo non-maskable interrupts. Clearing this flag to "0" disables the acceptance of all maskable interrupts. Setting to "1" enables the acceptance of interrupts.

When an interrupt is accepted, this flag is cleared to "0" to temporarily disable the acceptance of maskable interrupts. After execution of the interrupt service program, this flag is set to "1" by the maskable interrupt return instruction [RETI] to again enable the acceptance of interrupts. If an interrupt request has already been occurred, interrupt service starts immediately after execution of the [RETI] instruction.

Pseudo non-maskable interrupts are returned by the [RETN] instruction. In this case, the IMF is set to "1" only when pseudo non-maskable interrupt service is started with interrupt acceptance enabled (IMF = 1). Note that the IMF remains "0" when cleared in the interrupt service program.

The IMF is assigned to bit 0 at address $003A_H$ in the SFR, and can be read and written by an instruction. The IMF is normally set and cleared by the [EI] and [DI] instructions, and the IMF is initialized to "0" during reset.

Note : Do not set IMF to "1" during non-maskable interrupt service programs.

② **Individual interrupt Enable Flags** (EF_{15} to EF_4)

These flags enable and disable the acceptance of individual maskable interrupts, except for an external interrupt 0. Setting the corresponding bit of an individual interrupt enable flag to "1" enables acceptance of an interrupt, setting the bit to "0" disables acceptance.

Example 1 : Sets EF for individual interrupt enable, and sets IMF to "1".

```
LDW     (EIR), 1110100010100001B    ;  EF_15~EF_13, EF_11, EF_7, EF_5, IMF←1
```

Example 2 : Sets an individual interrupt enable flag to "1".

```
SET     (EIRH).4                    ;  EF_12←1
```

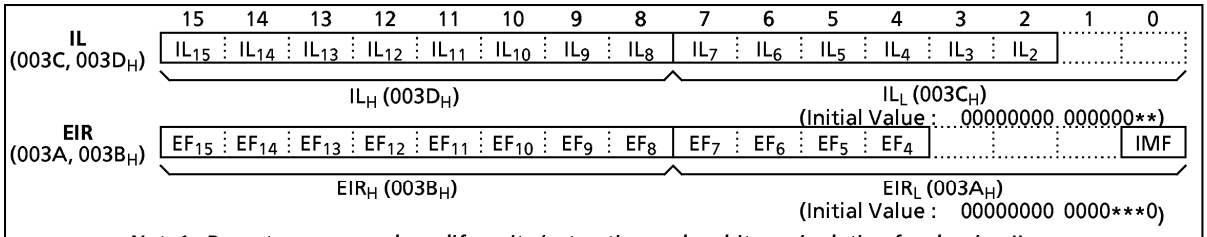

Note1: Do not use any read-modify-write instruction such as bit manipulation for clearing IL.
Note2: Do not clear IL_2 to "0" by an instruction.
Note3: Do not set IMF to "1" during non-maskable interrupt service program.

Figure 1-23. Interrupt Latch (IL) and Interrupt Enable Register (EIR)

1.9.1 Interrupt Sequence

An interrupt request is held until the interrupt is accepted or the interrupt latch is cleared to "0" by a reset or an instruction. Interrupt acceptance sequence requires 8 machine cycles (4 μs @ fc = 8 MHz in the NORMAL mode) after the completion of the current instruction execution. The interrupt service task terminates upon execution of an interrupt return instruction [RETI] (for maskable interrupts) or [RETN] (for pseudo non-maskable interrupts).

(1) Interrupt acceptance processing

① The interrupt master enable flag (IMF) is cleared to "0" to temporarily disable the acceptance of any following maskable interrupts. When a non-maskable interrupt is accepted, the acceptance of any following interrupts is temporarily disabled.
② The interrupt latch (IL) for the interrupt source accepted is cleared to "0".
③ The contents of the program counter (return address) and the program status word are saved (pushed) on the stack. The contents of Stack Pointer is decreased by 3.
④ The entry address of the interrupt service program is read from the vector table, and the entry address is loaded to the program counter.
⑤ The instruction stored at the entry address of the interrupt service program is executed.

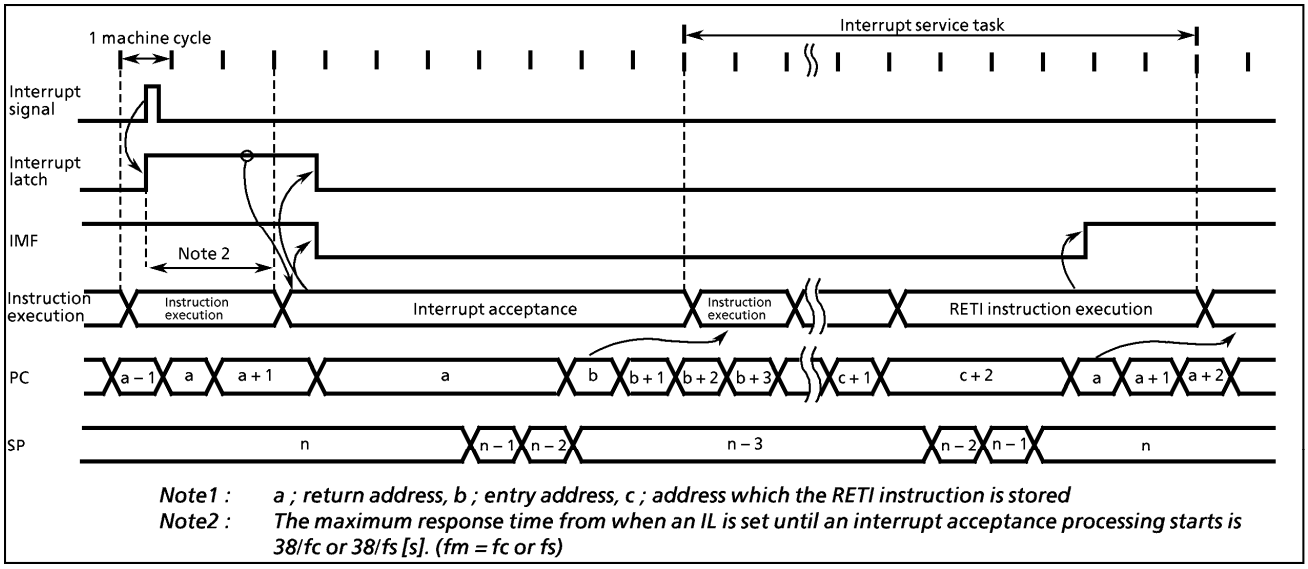

Figure 1-24. Timing Chart of Interrupt Acceptance and Interrupt Return Instruction

Example : Correspondence between vector table address for INTTBT and the entry address of the interrupt service program.

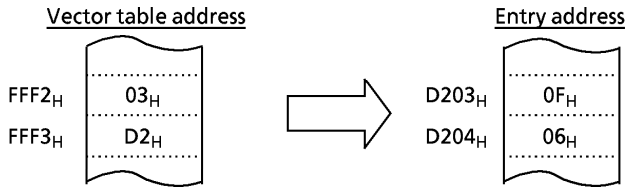

A maskable interrupt is not accepted until the IMF is set to "1" even if a maskable interrupt of higher priority than that of the current interrupt being serviced.
When nested interrupt service is necessary, the IMF is set to "1" in the interrupt service program. In this case, acceptable interrupt sources are selectively enabled by the individual interrupt enable flags. However, an acceptance of external interrupt 0 cannot be disabled by the EF; therefore, if disablement is necessary, either the external interrupt function of the $\overline{INT0}$ pin must be disabled with the INT0EN in the external interrupt control register (EINTCR) or interrupt processing must be avoided by the program.
When INT0EN = 0, the interrupt latch IL3 is not set, therefore, the falling edge of the $\overline{INT0}$ pin input cannot be detected.

Example 1 : Disables an external interrupt 0 using INT0EN

```
        LD      (EINTCR), 00000000B    ;  INT0EN←0
```

Example 2 : Disables the processing of external interrupt 0 under the software control (using bit 0 at address $00F0_H$ as the interrupt processing disable switch)

```
PINT0 :   TEST    (00F0H) . 0        ;  Return without interrupt processing if (00F0H)0 = 1
          JRS     T, SINT0
          RETI
SINT0 :   Interrupt processing
          RETI
            ⋮
VINT0 :   DW      PINT0
```

(2) General Purpose register save / restore processing

During interrupt acceptance processing, the program counter and the program status word are automatically saved on the stack, but not the accumulator and other registers. These registers are saved by the program if necessary. Also, when nesting multiple interrupt services, it is necessary to avoid using the same data memory area for saving registers.
The following method is used to save/restore the general-purpose registers:

① General-purpose register save/restore by register bank changeover:
The general-purpose registers can be saved at high-speed by switching to a register bank that is not in use. Normally, bank 0 is used for the main task and banks 1 to 15 are assigned to interrupt service tasks. To increase the efficiency of data memory utilization, the same bank is assigned for interrupt sources which are not nested.
The switched bank is automatically restored by executing an interrupt return instruction [RETI] or [RETN]. Therefore, it is not necessary for a program to save the RBS.

Example : Register Bank Changeover

```
PINTxx :  LD      RBS, n             ;  Switches to bank n (1 μs at 8 MHz)
          interrupt processing
          RETI                       ;  Restores bank and Returns
```

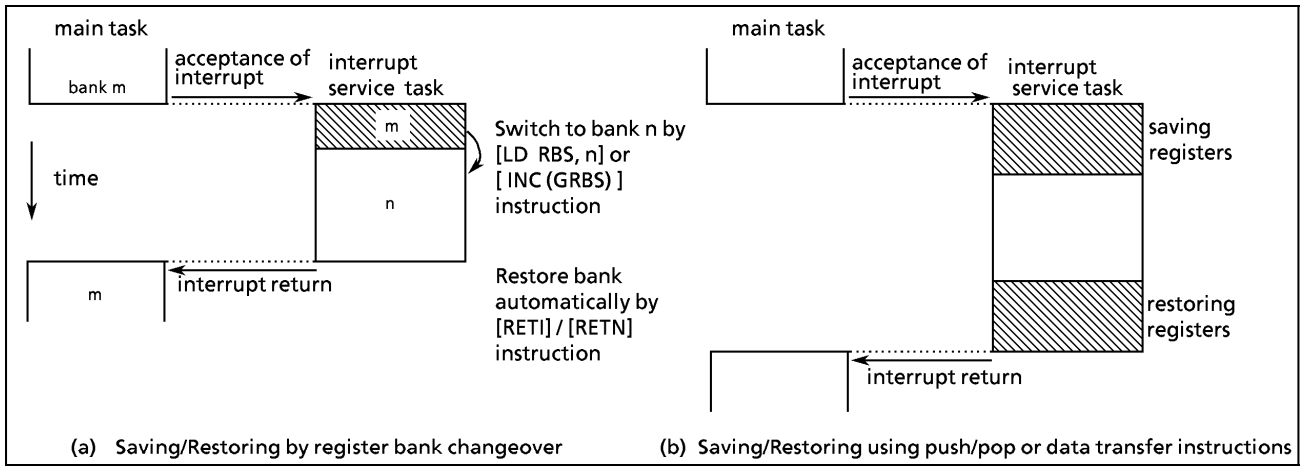

Figure 1-25. Saving/Restoring General-purpose Registers

② General-purpose register save/restore using push and pop instructions:
To save only a specific register, and when the same interrupt source occurs more than once, the general-purpose registers can be saved/restored using push/pop instructions.

Example : Register save using push and pop instructions

```
PINTxx :    PUSH    WA              ; Save WA register pair
            interrupt processing
            POP     WA              ; Restore WA register pair
            RETI                    ; Return
```

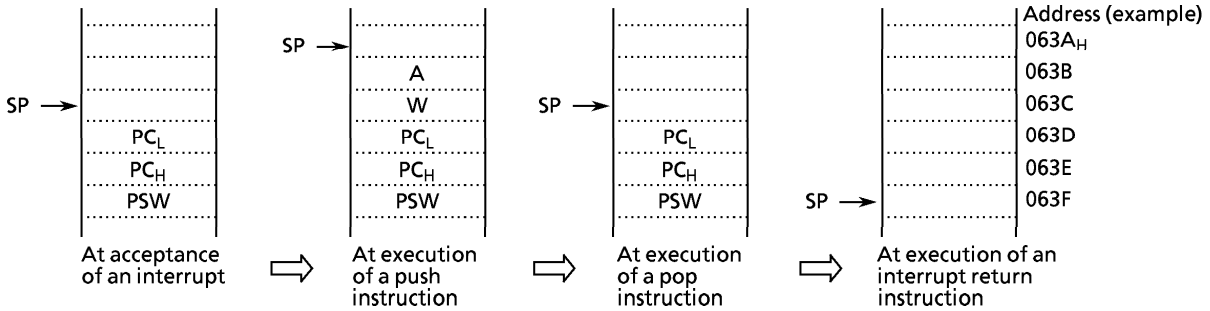

③ General-purpose registers save/restore using data transfer instructions:
Data transfer instructions can be used to save only a specific general-purpose register during processing of a single interrupt.

Example : Saving/restoring a register using data transfer instructions

```
PINTxx :    LD      (GSAVA), A      ; Save A register
            interrupt processing
            LD      A, (GSAVA)      ; Restore A register
            RETI                    ; Return from interrupt service
```

The interrupt return instructions [RETI] / [RETN] perform the following operations.

[RETI] Maskable interrupt return	[RETN] Non-maskable interrupt return
① The contents of the program counter and the program status word are restored from the stack.	① The contents of the program counter and program status word are restored from the stack.
② The stack pointer is incremented 3 times.	② The stack pointer is incremented 3 times.
③ The interrupt master enable flag is set to "1".	③ The interrupt master enable flag is set to "1" only when a non-maskable interrupt is accepted in interrupt enable status. However, the interrupt master enable flag remains at "0" when so clear by an interrupt service program.

Interrupt requests are sampled during the final cycle of the instruction being executed. Thus, the next interrupt can be accepted immediately after the interrupt return instruction is executed.

Note : When the interrupt processing time is longer than the interrupt request generation time, the interrupt service task is performed but not the main task.

1.9.2 External Interrupts

The 87CM71/N71/P71/S71 each have five external interrupt inputs ($\overline{INT0}$, INT1, INT2, INT3, and $\overline{INT5}$). Three of these are equipped with digital noise rejection circuits (pulse inputs of less than a certain time are eliminated as noise). Edge selection is also possible with INT1, INT2 and INT3.

The $\overline{INT0}$/P10 pin can be configured as either an external interrupt input pin or an input/output port, and is configured as an input port during reset.

Edge selection, noise rejection control and $\overline{INT0}$/P10 pin function selection are performed by the external interrupt control register (EINTCR). When INT0EN = 0, the IL_3 will not be set even if the falling edge of $\overline{INT0}$ pin input is detected.

Table 1-3. External Interrupts

Source	Pin	Secondary function pin	Enable conditions	Edge	Digital noise rejection
INT0	$\overline{INT0}$	P10	IMF = 1, INT0EN = 1	falling edge	— (hysteresis input)
INT1	INT1	P11	IMF · EF_5 = 1	falling edge or rising edge	Pulses of less than 15/fc or 63/fc [s] are eliminated as noise. Pulses equal to or more than 48/fc [s] or 192/fc [s] are regarded as signals.
INT2	INT2	P12/TC1	IMF · EF_7 = 1		Pulses of less than 7/fc [s] are eliminated as noise. Pulses of equal to or more than 24/fc [s] are regarded as signals.
INT3	INT3	P30/TC3	IMF · EF_{11} = 1		
INT5	$\overline{INT5}$	P20/$\overline{STOP}$	IMF · EF_{15} = 1	falling edge	— (hysteresis input)

Note 1 : The noise rejection function is turned off in SLOW and SLEEP modes. Also, the noise reject times are not constant for pulses input while transiting between operating modes (NORMAL2↔SLOW)

Note 2 : The noise rejection function is also affected for timer/counter input (TC1 and TC3 pins).

Note 3 : The pulse width (both "H" and "L" level) for input to the $\overline{INT0}$ and $\overline{INT5}$ pins must be over 1 machine cycle.

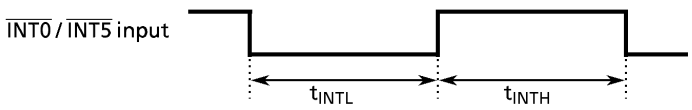

t_{INTL}, t_{INTH} > tcyc (*Note : tcyc = 4/fm [s]*)

Note4 : If a noiseless signal is input to the external interrupt pin in the NORMAL 1/2 or IDLE 1/2 mode, the maximum time from the edge of input signal until the IL is set is as follows :

① INT1 pin 49/fc [s] (INT1NC = 1) , 193/fc [s] (INT1NC = 0)

② INT2,INT3 pins 25/fc [s]

Note 5 : When INT0EN = 0, interrupt latch IL3 is not set even if a falling edge is detected for $\overline{INT0}$ pin input.

Note 6 : When high-impedance is specified for port output in stop mode, port input is forcibly fixed to low level internally. Thus, interrupt latches of external interrupt inputs except $\overline{INT5}$ (P20/$\overline{STOP}$) which are also used as ports may be set to "1". To specify high-impedance for port output in stop mode, first disable interrupt service (IMF = 0) , activate stop mode. After releasing stop mode, clear interrupt latches using load instruction, then, enable interrupt service.

Example : Activating stop mode

```
LD    (SYSCR1), 01000000B      ;  OUTEN ← 0 (SOECUFUES HIGH-IMPEDANCE)
DI                             ;  IMF ← 0 (disabkes ubterryot servuce)
SET   (SYSCR1) . STOP          ;  STOP ← 1 (activates stop mode)
LDW   (IL), 1111011101010111B  ;  IL11, 7, 5, 3 ← 0 (clears interrupt latcges)
EI                             ;  IMF ← 1 (ebables interrupt service)
```

EINTCR (0037_H)

7	6	5	4	3	2	1	0
INT1 NC	INT0 EN		(TC4 ES)	INT3 ES	INT2 ES	INT1 ES	

(Initial value : 00*0 000*)

INT1NC	Noise reject time select	0 : Pulses of less than 63/fc [s] are eliminated as noise 1 : Pulses of less than 15/fc [s] are eliminated as noise	write only
INT0EN	P10/$\overline{\text{INT0}}$ pin configuration	0 : P10 input/output port 1 : $\overline{\text{INT0}}$ pin (Port P10 should be set to an input mode)	
INT3 ES INT2 ES INT1 ES	INT3 to INT1 edge select	0 : Rising edge 1 : Falling edge	

*Note 1 : fc ; High-frequency clock [Hz] * ; don't care*

Note 2 : Edge detection during switching edge selection is invalid.

Note 3 : Do not change EINTCR when IMF = 1. After changing EINTCR, interrupt latches of external interrupt inputs must be cleared to "0" using load instruction.

Note 4 : In order to change of external interrupt input by rewriting the contents of INT2ES and INT3ES during NORMAL1/2 mode, clear interrupt latches of external interrupt inputs (INT2 and INT3) after 8 machine cycles from the time of rewriting. During SLOW mode, 3 machine cycles are required.

*Note 5 : In order to change an edge of timer counter input by rewriting the contents of INT2ES and INT3ES during NORMAL1/2 mode, rewrite the contents after timer counter is stopped (TC*s = 0), that is, interrupt disable state. Then, clear interrupt laches of external interrupt inputs (INT2 and INT3) after 8 machine cycles from the time of rewriting to change to interrupt enable state. Finally, state timer counter. During SLOW mode, 3 machine cycles are required.*

Example : When changing TC1 pin inputs edge in external trigger timer mode from rising edge to falling edge.

```
                LD (TC1CR),01001000B     ;  TC1S ← 00 (stop TC1)
                DI                       ;  IMF ← 0 (disable interrupt service)
                LD (EINTCR),00000100B    ;  INT2ES ← 1 (change edge selection)
      ↑         NOP
  8 machine     to
     cycles     NOP
      ↓         LD (ILL),01111111B       ;  IL7 ← 0 (clear interrupt latch)
                EI                       ;  IMF ← 1 (enable interrupt service)
                LD (TC1CR),01111000B     ;  TC1S ← 11 (start TC1)
```

Note 6 : If changing the contents of INT1ES during NORMAL1/2 mode, interrupt latch of external interrupt input INT1 must be cleared after 14 machine cycles (when INT1NC = 1) or 50 machine cycles (when INT1NC = 0) from the time of changing. During SLOW mode, 3 machine cycles are required.

Figure 1-26. External Interrupt Control Register

1.9.3 Software Interrupt (INTSW)

Executing the [SWI] instruction generates a software interrupt and immediately starts interrupt processing (INTSW is highest prioritized interrupt). However, if processing of a non-maskable interrupt is already underway, executing the SWI instruction will not generate a software interrupt but will result in the same operation as the [NOP] instruction. Thus, the [SWI] instruction behaves like the [NOP] instruction.

Note : Software interrupt generates during non-maskable interrupt processing to use SWI instruction for software break in a development tool.

Use the [SWI] instruction only for detection of the address error or for debugging.

① Address Error Detection

FF_H is read if for some cause such as noise the CPU attempts to fetch an instruction from a non-existent memory address. Code FF_H is the SWI instruction, so a software interrupt is generated and an address error is detected. The address error detection range can be further expanded by writing FF_H to unused areas of the program memory. the address trap reset is generated in case that an instruction is fetched from RAM or SFR areas.

Note : The fetch data from addresses $3F80_H$ to $3FFF_H$ (test ROM area) is not "FF_H".

② Debugging

Debugging efficiency can be increased by placing the SWI instruction at the software break point setting address.

1.10 Watchdog Timer (WDT)

The watchdog timer rapidly detects the CPU malfunction such as endless looping caused by noise or the like, and resumes the CPU to the normal state.

The watchdog timer signal for detecting malfunction can be selected either as a reset output or a non-maskable interrupt request. However, selection is possible only once after reset. At first, the reset output is selected.

When the watchdog timer is not being used for malfunction detection, it can be used as a timer to generate an interrupt at fixed intervals.

1.10.1 Watchdog Timer Configuration

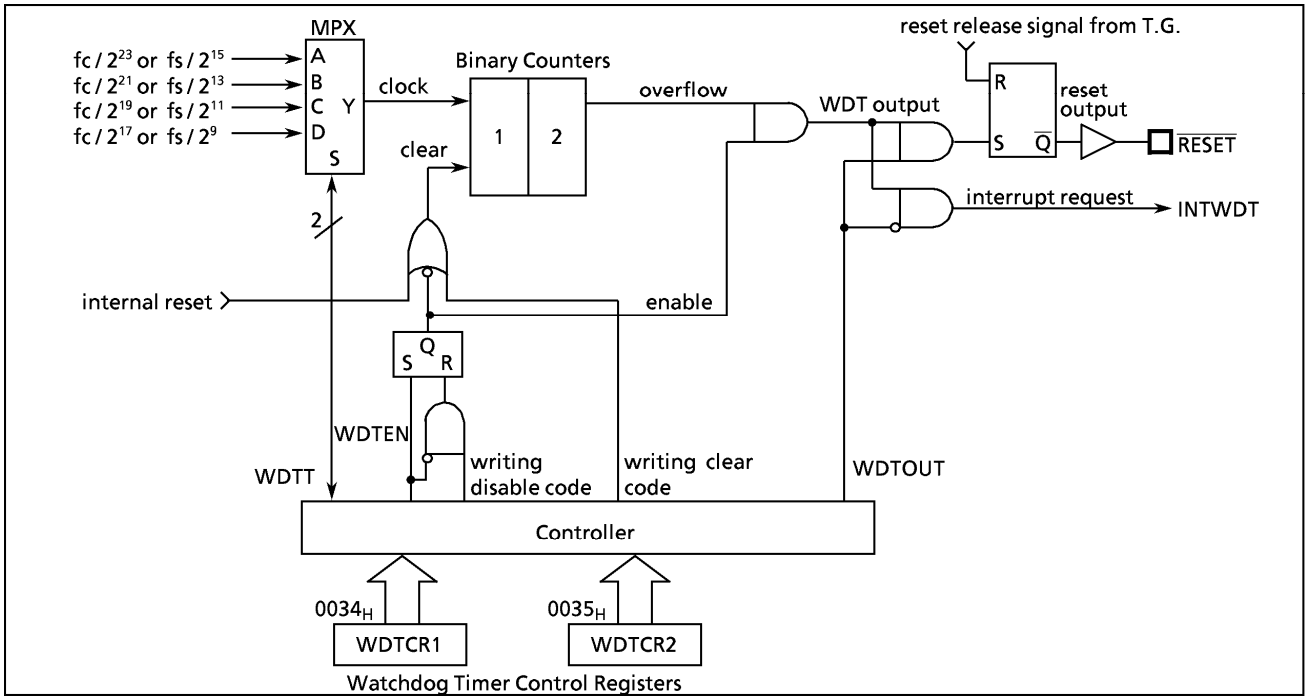

Figure 1-27. Watchdog Timer Configuration

1.10.2 Watchdog Timer Control

Figure 1-28 shows the watchdog timer control registers (WDTCR1, WDTCR2). The watchdog timer is automatically enabled after reset.

(1) Malfunction detection methods using the watchdog timer

The CPU malfunction is detected as follows:

① Setting the detection time, selecting output, and clearing the binary counter.

② Repeatedly clearing the binary counter within the setting detection time.

If a CPU malfunction occurs for any cause, the watchdog timer output will become active on the rise of an overflow from the binary counters unless the binary counters are cleared. At this time, when WDTOUT = 1 a reset is generated, which drives the $\overline{\text{RESET}}$ pin low to reset the internal hardware and the external circuits. When WDTOUT = 0, a watchdog timer interrupt (INTWDT) is generated.

The watchdog timer temporarily stops counting in STOP mode (including warm-up) or IDLE mode, and automatically restarts (continues counting) when STOP/IDLE mode is released.

Example : Sets the watchdog timer detection time to 2^{21}/fc [s] and resets the CPU malfunction.

```
                    LD    (WDTCR2), 4EH        ; Clears the binary counters
                    LD    (WDTCR1), 00001101B  ; WDTT←10, WDTOUT←1
                    LD    (WDTCR2), 4EH        ; Clears the binary counters
Within 3/4 of WDT   :                            (always clear immediately after changing WDTT)
 detection time     :
                    LD    (WDTCR2), 4EH        ; Clears the binary counters
Within 3/4 of WDT   :
 detection time     :
                    LD    (WDTCR2), 4EH        ; Clears the binary counters
                    :
```

Watchdog Timer Control Register 1

WDTCR1 (0034_H)

7	6	5	4	3	2	1	0
				WDT EN	WDTT		WDT OUT

(Initial value : **** 1001)

WDTEN	Watchdog timer enable/disable	0 : Disable (It is necessary to write the disable code to WDTCR2) 1 : Enable	write only
WDTT	Watchdog timer detection time	00 : 2^{25} / fc or 2^{17} / fs [s] 01 : 2^{23} / fc or 2^{15} / fs 10 : 2^{21} / fc or 2^{13} / fs 11 : 2^{19} / fc or 2^{11} / fs	
WDTOUT	Watchdog timer output select	0 : Interrupt request 1 : Reset output	

Note 1 : WDTOUT cannot be set to "1" by program after clearing WDTOUT to "0".
*Note 2 : fc ; High-frequency clock [Hz] fs ; Low-frequency clock [Hz] * ; don't care*
Note 3 : WDTCR1 is a write-only register and must not be used with any of the read-modify-write instructions.
Note 4 : Disable the watchdog timer or clear the counter just before switching to STOP mode. When the counter is cleared just before switching to STOP mode, clear the counter again subsequently to releasing STOP mode.

Watchdog Timer Control Register 2

WDTCR2 (0035_H)

7	6	5	4	3	2	1	0

(Initial value : **** ****)

WDTCR2	Watchdog timer control code write register	$4E_H$: Watchdog timer binary counter clear (clear code) $B1_H$: Watchdog timer disable (disable code) others : Invalid	write only

Note 1 : The disable code is invalid unless written when WDTEN = 0.
*Note 2 : * ; don't care*
Note 3 : Since WDTCR2 is a write-only register, read-modify-write instructions (e.g., bit manipulating instructions such as SET or CLR and arithmetic instructions such as AND or OR) cannot be used for read / write to this register.
Note 4 : To clear binary counter doesn't initialize the source clock, therefore, it is recommended to clear binary counter within 3/4 of the detection period.

Figure 1-28. Watchdog Timer Control Registers

Table 1-4. Watchdog Timer Detection Time

Operating mode			Detection time	
NORMAL1	NORMAL2	SLOW	At fc = 8 MHz	At fs = 32.768 kHz
2^{25} / fc [s]	2^{25} / fc, 2^{17} / fs	2^{17} / fs	4.194 s	4 s
2^{23} / fc	2^{23} / fc, 2^{15} / fs	2^{15} / fs	1.048 s	1 s
2^{21} / fc	2^{21} / fc, 2^{13} / fs	——	262.1 ms	250 ms
2^{19} / fc	2^{19} / fc, 2^{11} / fs	——	65.5 ms	62.5 ms

(2) Watchdog Timer Enable

The watchdog timer is enabled by setting WDTEN (bit 3 in WDTCR1) to "1". WDTEN is initialized to "1" during reset, so the watchdog timer operates immediately after reset is released.

Example : Enables watchdog timer

```
LD      (WDTCR1), 00001000B      ; WDTEN←1
```

(3) Watchdog Timer Disable

The watchdog timer is disabled by writing the disable code ($B1_H$) to WDTCR2 after clearing WDTEN (bit 3 in WDTCR1) to "0". The watchdog timer is not disabled if this procedure is reversed and the disable code is written to WDTCR2 before WDTEN is cleared to "0". The watchdog timer is halted temporarily in STOP mode (including warm-up) and IDLE mode, and restarts automaticallyafter STOP or IDLE mode is released.

During disabling the watchdog timer, the binary counters are cleared.

Example : Disables watchdog timer

```
LDW     (WDTCR1) , 0B101H        ; WDTEN←0, WDTCR2←disable code
```

1.10.3 Watchdog Timer Interrupt (INTWDT)

This is a pseudo non-maskable interrupt which can be accepted regardless of the contents of the EIR. If a watchdog timer interrupt or a software interrupt is already accepted, however, the new watchdog timer interrupt waits until the previous interrupt processing is completed (the end of the [RETN] instruction execution).

The stack pointer (SP) should be initialized before using the watchdog timer output as an interrupt source with WDTOUT.

Example : Watchdog timer interrupt setting up.

```
LD      SP, 063FH                ; Sets the stack pointer
LD      (WDTCR1) , 00001000B     ; WDTOUT←0
```

1.10.4 Watchdog Timer Reset

If the watchdog timer output becomes active, a reset is generated, which drives the $\overline{RESET}$ pin (sink open drain output) low to reset the internal hardware and the external circuits. The reset output time is 2^{20}/fc [s] (131 ms at fc = 8 MHz). The high-frequency clock oscillator also turns on when a watchdog timer reset is generated in SLOW mode.

Note : The high-frequency clock oscillator also turns on when a watchdog timer reset is generated in SLOW mode. Thus, the reset output time is 2^{20}/fc.
The reset output time include a certain amount of error if there is any fluctuation of the oscillation frequency when the high-frequency clock oscillator turns on. Thus, the reset, the reset output time must be considered approximate value.

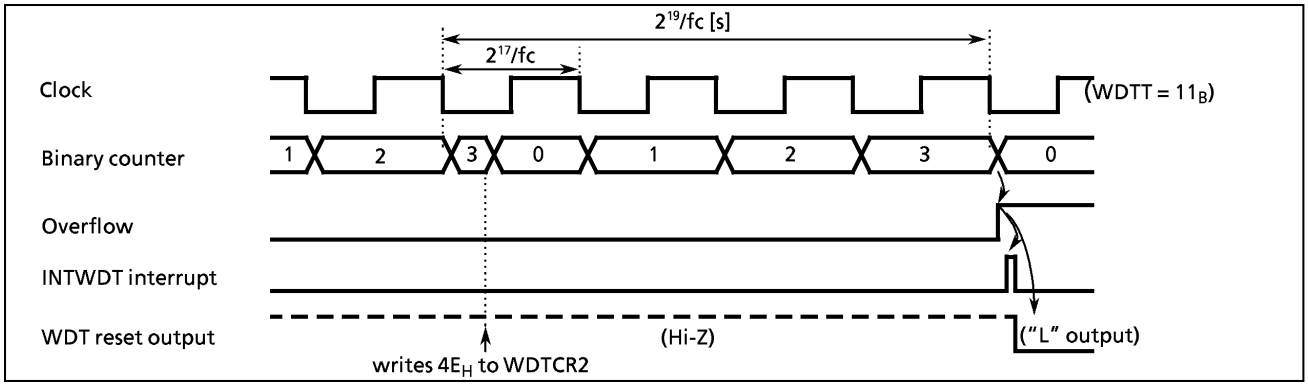

Figure 1-29. Watchdog Timer Interrupt / Reset

1.11 Reset Circuit

The 87CM71/N71/P71/S71 each have four types of reset generation procedures: an external reset input, an address trap reset, a watchdog timer reset and a system clock reset. Table 1-5 shows on-chip hardware initialization by reset action. The internal source reset circuit (watchdog timer reset, address trap reset, and system clock reset) is not initialized when power is turned on. Thus, output from the $\overline{RESET}$ pin may go low (2^{20}/fc [s] (131 ms at 8 MHz)) when power is turned on.

Table 1-5. Initializing Internal Status by Reset Action

On-chip Hardware		Initial Value	On-chip Hardware	Initial Value
Program counter	(PC)	$(FFFF_H) \cdot (FFFE_H)$	Divider of Timing generator	0
Register bank selector	(RBS)	0	Watchdog timer	Enable
Jump status flag	(JF)	1	Output latches of I/O ports	Refer to I/O port circuitry
Interrupt master enable flag	(IMF)	0	Control registers	Refer to each of control register
Interrupt individual enable flags	(EF)	0		
Interrupt latches	(IL)	0		

1.11.1 External Reset Input

When the $\overline{RESET}$ pin is held at low for at least 3 machine cycles (12/fc [s]) with the power supply voltage within the operating voltage range and oscillation stable, a reset is applied and the internal state is initialized.

When the $\overline{RESET}$ pin input goes high, the reset operation is released and the program execution starts at the vector address stored at addresses $FFFE_H$ - $FFFF_H$.

The $\overline{RESET}$ pin contains a Schmitt trigger (hysteresis) with an internal pull-up resistor. A simple power-on-reset can be applied by connecting an external capacitor and a diode.

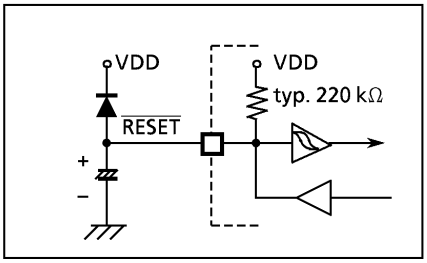

Figure 1-30. Simple Power-on-Reset Circuitry

1.11.2 Address Trap Reset

If a CPU malfunction occurs and an attempt is made to fetch an instruction from the RAM or the SFR area (addresses 0000_H - $063F_H$), an address-trap-reset will be generated. Then, the $\overline{RESET}$ pin output will go low. The reset time is 2^{20}/fc [s] (131 ms at 8 MHz).

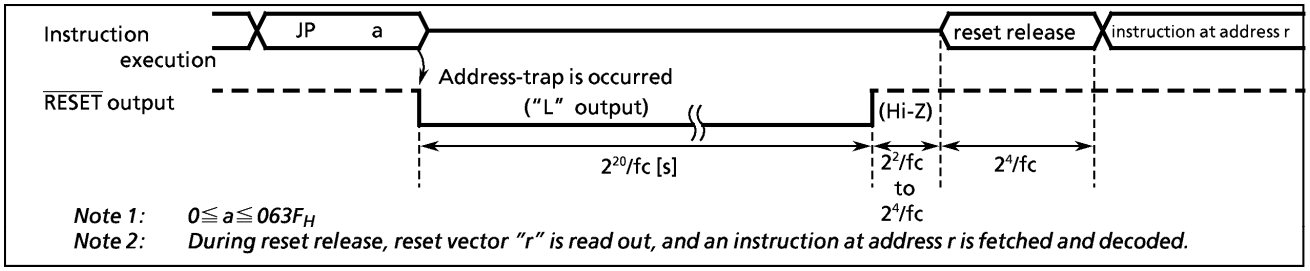

Figure 1-31. Address-Trap-Reset

1.11.3 Watchdog Timer Reset

Refer to Section "1.10 Watchdog Timer".

1.11.4 System-Clock-Reset

Clearing both XEN and XTEN (bits 7 and 6 in SYSCR2) to "0" stops both high-frequency and low-frequency oscillation, and causes the MCU to deadlock. This can be prevented by automatically generating a reset signal whenever XEN = XTEN = 0 is detected to continue the oscillation. Then, the $\overline{RESET}$ pin output goes low from high-impedance. The reset time is 2^{20}/fc [s] (131 ms at 8 MHz).

2. ON-CHIP PERIPHERALS FUNCTIONS

2.1 Special Function Registers (SFR) and Data Buffer Registers (DBR)

The TLCS-870 Series uses the memory mapped I/O system, and all peripheral control and data transfers are performed through the special function registers (SFR) and data buffer registers (DBR).
The SFR are mapped to addresses 0000_H – $003F_H$, and the DBR to addresses $0F80_H$ – $0FFF_H$.
Figure 2-1 shows the 87CM71/N71/P71/S71 SFRs and DBRs.

Address	Read	Write
0000_H	P0 port	
01	P1 Port	
02	P2 Port	
03	P3 Port	
04	P4 Port / KEYDR	
05	P5 Port	
06	P6 Port	
07	P7 Port	
08	P8 Port	
09	P9 Port	
0A	–	P0CR (P0 I/O control)
0B	–	P1CR (P1 I/O control)
0C	–	P4CR (P4 control)
0D	reserved	
0E	–	CMPCR (Comparator input control)
0F	CMPDR (Comparator input data register)	
10	–	$TREG1_L$ (Timer register 1)
11	–	$TREG1_H$
12	reserved	
13	reserved	
14	–	TC1CR (TC1 control)
15	–	TC2CR (TC2 control)
16	–	$TREG2_L$ (Timer register 2)
17	–	$TREG2_H$
18	TREG3A (Timer register 3A)	
19	TREG3B (Timer register 3B)	–
1A	–	TC3CR (TC3 control)
1B	–	TREG4 (Timer register 4)
1C	–	TC4CR (TC4 control)
1D	reserved	
1E	reserved	
1F	reserved	

Address	Read	Write
0020_H	SIOSR (SIO status)	SIOCR1 (SIO control)
21	–	SIOCR2
22	reserved	
23	reserved	
24	HSOSR (HSO status)	HSOCR (HSO control)
25	reserved	
26	reserved	
27	reserved	
28	–	VFTCR1 (VFT control)
29	VFTSR (VFT status)	VFTCR2
2A	KEYSR (Key scan status)	–
2B	reserved	
2C	reserved	
2D	reserved	
2E	reserved	
2F	reserved	
30	reserved	
31	reserved	
32	reserved	
33	reserved	
34	–	WDTCR1 (WDT control)
35	–	WDTCR2
36	–	TBTCR (TBT / TG / DVO control)
37	–	EINTCR (Interrupt control)
38	SYSCR1 (System control)	
39	SYSCR2	
3A	EIR_L (Interrupt enable register)	
3B	EIR_H	
3C	IL_L (Interrupt latch)	
3D	IL_H	
3E	reserved	
3F	PSW (Program status word)	RBS (Register bank selector)

(a) Special Function Registers

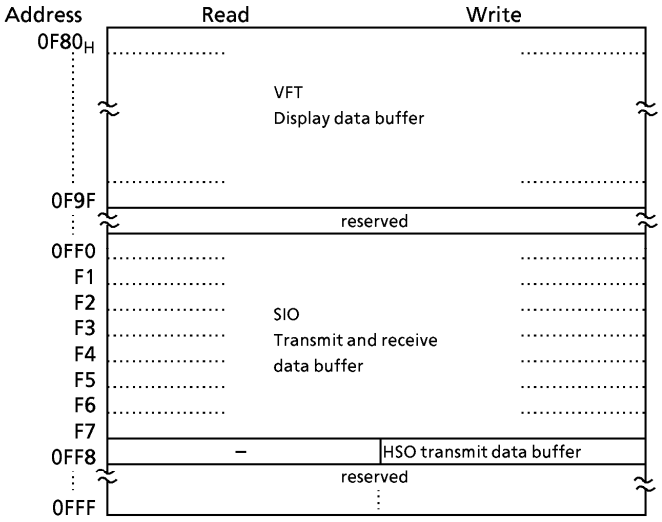

(b) Data Buffer Registers

Note 1 : Do not access reserved areas by the program.
Note 2 : – : Cannot be accessed.
Note 3 : When defining address $003F_H$ with assembler symbols, use GPSW and GRBS.
Note 4 : Write-only registers and interrupt latches cannot use the read-modify-write instructions (bit manipulation instructions such as SET, CLR, etc. and logical operation instructions such as AND, OR, etc.)
Note 5 : KEYDR is a read-only register.

Figure 2-1. SFR & DBR

2.2 I/O Ports

The 87CM71/N71/P71/S71 each have 10 parallel input/output ports (73pins) each as follows:

	Primary Function	Secondary Functions
Port P0	8-bit I/O port	
Port P1	8-bit I/O port	External interrupt input, timer/counter input, and divider output
Port P2	3-bit I/O port	Low-frequency resonator connections, external interrupt input, and STOP mode release signal input
Port P3	8-bit I/O port	Serial interface, external interrupt input, and timer/counter input
Port P4	8-bit I/O port	Key scan input and compartor input
Port P5	6-bit I/O port	Compartor input and timer/counter output
Port P6	8-bit I/O port	VFT digit driver output
Port P7	8-bit I/O port	VFT digit driver output
Port P8	8-bit output port	VFT segment driver output or key strobe output
Port P9	8-bit I/O port	VFT segment driver output or key strobe output

Ports P1, P2, P3, P4, P5, P6, P7, P8 and P9 can also use secondary function.
Each output port contains a latch, which holds the output data. Input ports excluding P4 do not have latches, so the external input data should either be held externally until read or reading should be performed several times before processing. Figure 2-2 shows input/output timing examples.
External data is read from an I/O port in the S1 state of the read cycle during execution of the read instruction. This timing can not be recognized from outside, so that transient input such as chattering must be processed by the program.
Output data changes in the S2 state of the write cycle during execution of the instruction which writes to an I/O port.

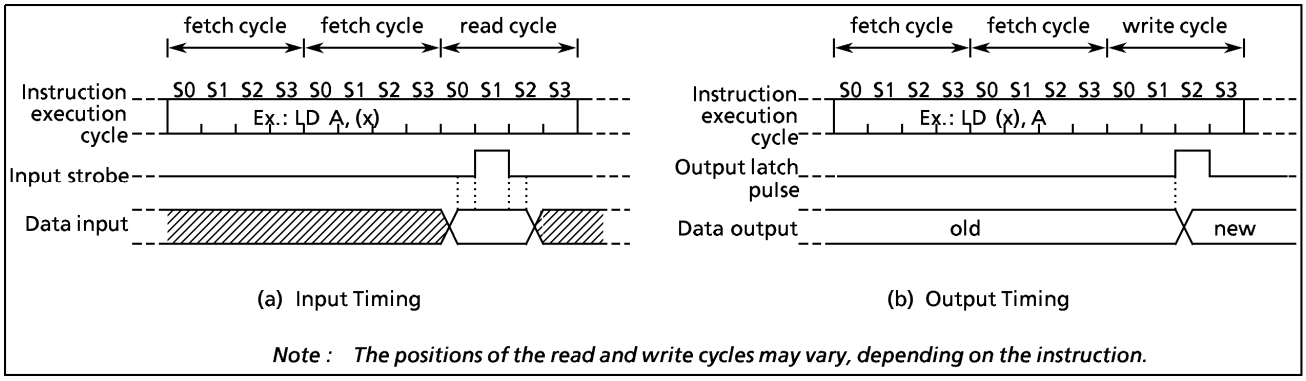

Note : The positions of the read and write cycles may vary, depending on the instruction.

Figure 2-2. Input/Output Timing (Example)

When reading an I/O port except programmable I/O ports P0 and P1, whether the pin input data or the output latch contents are read depends on the instructions, as shown below:

(1) Instructions that read the output latch contents

① XCH r, (src)
② CLR/SET/CPL (src).b
③ CLR/SET/CPL (pp).g
④ LD (src).b, CF
⑤ LD (pp) . b, CF
⑥ ADD/ADDC/SUB/SUBB/AND/OR/XOR (src), n
⑦ (src) side of ADD/ADDC/SUB/SUBB/AND/OR/XOR (src), (HL)

(2) Instructions that read the pin input data

① Instructions other than the above (1)
② (HL) side of ADD/ADDC/SUB/SUBB/AND/OR/XOR (src), (HL)

2.2.1 Port P0 (P07 - P00)

Port P0 is an 8-bit general-purpose input/output port which can be configured as either an input or an output in one-bit unit under software control. Input/output mode is specified by the corresponding bit in the port P0 input/output control register (P0CR). Port P0 is configured as an input if its corresponding P0CR bit is cleared to "0", and as an output if its corresponding P0CR bit is set to "1".
During reset, P0CR is initialized to "0", which configures port P0 as input. The P0 output latches are also initialized to "0". Data is written into the output latch regardless of P0CR contents. Therefore initial output data should be written into the output latch before setting P0CR.

Note 1 : Ports set to the input mode read the pin states. When input pin and output pin exist in port P0 together, the contents of the output latch of ports set to the input mode may be rewritten by executing the bit manipulation instructions. Pins set to the output mode read a value of the output latch.
Note 2 : The P0CR is a write-only register. It can not be operated by the read-modify instruction (Bit manipulation instructions of SET, CLR, etc. and Arithmetic instructions of AND, OR, etc.)

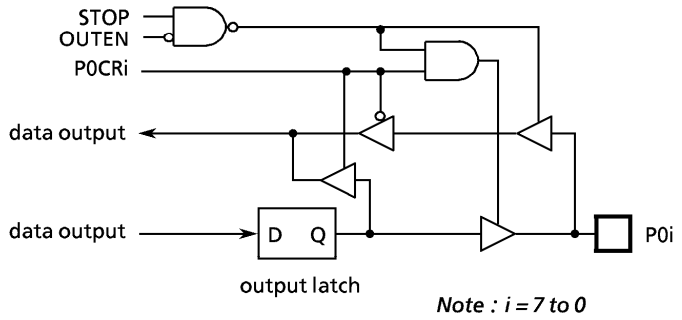

	7	6	5	4	3	2	1	0	
P0 (0000_H)	P07	P06	P05	P04	P03	P02	P01	P00	(Initial value : 0000 0000)
P0CR ($000A_H$)									(Initial value : 0000 0000)

P0CR	I/O control for port P0	0 : input mode 1 : output mode	write only

Figure 2-3. Port P0 and P0CR

Example : Setting the upper 4 bits of port P0 as an input port and the lower 4 bits as an output port (Initial output data are 1010_B).

```
LD      (P0), 00001010B      ; Sets initial data to P0 output latches
LD      (P0CR), 00001111B    ; Sets the port P0 input/output mode
```

2.2.2 Port P1 (P17 - P10)

Port P1 is an 8-bit input/output port which can be configured as an input or an output in one-bit unit under software control. Input/output mode is specified by the corresponding bit in the port P1 input/output control register (P1CR). Port P1 is configured as an input if its corresponding P1CR bit is cleared to "0", and as an output if its corresponding P1CR bit is set to "1". During reset, P1CR is initialized to "0", which configures port P1 as an input . The P1 output latches are also initialized to "0". Data is written into the output latch regardless of P1CR contents. Therfore initial output data should be written into the output latch before setting P1CR. Port P1 is also used as an external interrupt input, a timer/counter input, and a divider output. When used as a secondary function pin, the input pins should be set to the input mode, and the output pins should be set to the output mode and beforehand the output latch should be set to "1".

It is recommended that pins P11 and P12 should be used as external interrupt inputs, timer/counter input, or input ports. The interrupt latch is set on the rising or falling edge of the output when used as output ports.

Pin P10 ($\overline{INT0}$) can be configured as either an I/O port or an external interrupt input with INT0EN (bit 6 in EINTCR). During reset, the pin P10 ($\overline{INT0}$) is configured as an input port P10.

Note 1 : Ports set to the input mode read the pin states. When input pin and output pin exist in port P1 together, the contents of the output latch of ports set to the input mode may be rewritten by executing the bit manipulation instructions. Pins set to the output mode read a value of the output latch.

Note 2 : The P1CR is a write-only register. It can not be operated by the read-modify instruction (Bit manipulation instructions of SET, CLR, etc. and Arithmetic instructions of AND, OR, etc.)

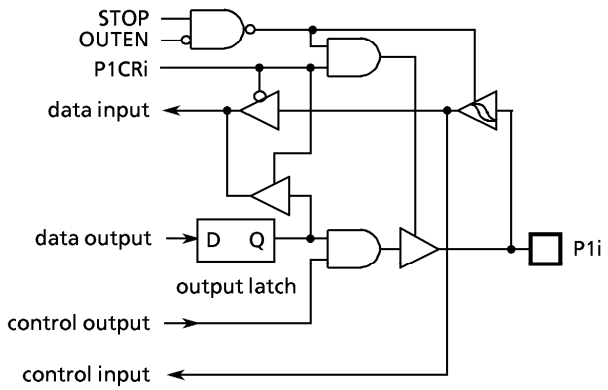

Note : i = 7 to 0

	7	6	5	4	3	2	1	0	
P1 (0001_H)	P17	P16	P15 TC2	P14	P13 $\overline{DVO}$	P12 INT2 TC1	P11 INT1	P10 $\overline{INT0}$	(Initial value : 0000 0000)
P1CR ($000B_H$)									(Initial value : 0000 0000)

P1CR	I/O control for port P1 (Set for each bit individually)	0 : Input mode 1 : Output mode	write only

Figure 2-4. Port P1 and P1CR

Example : Sets P17, P16 and P14 as output ports, P13 and P11 as input ports, and the others as function pins. Internal output data is "1" for the P17 and P14 pins, and "0" for the P16 pin.

```
LD      (EINTCR), 01000000B     ; INT0EN←1
LD      (P1), 10111111B         ; P17←1, P14←1, P16←0
LD      (P1CR), 11010000B
```

2.2.3 Port P2 (P22 - P20)

Port P2 is a 3-bit input/output port. It is also used as an external interrupt input, and low-frequency crystal connection pins When used as an input port, or the secondary function pin, the output latch should be set to "1". During reset , the output latches are initialized to "1".

A low-frequency crystal (32.768 kHz) is connected to pins P21 (XTIN) and P22 (XTOUT) in the dual-clock mode. In the single-clock mode, pins P21 and P22 can be used as normal input/output ports.

It is recommended that the P20 pin should be used as an external interrupt input, a STOP mode release signal input, or an input port. If used as an output port, the interrupt latch is set on the falling edge of the output pulse.

When a read instruction for port P2 is executed, bits 7 to 3 in P2 read in as undefined data.

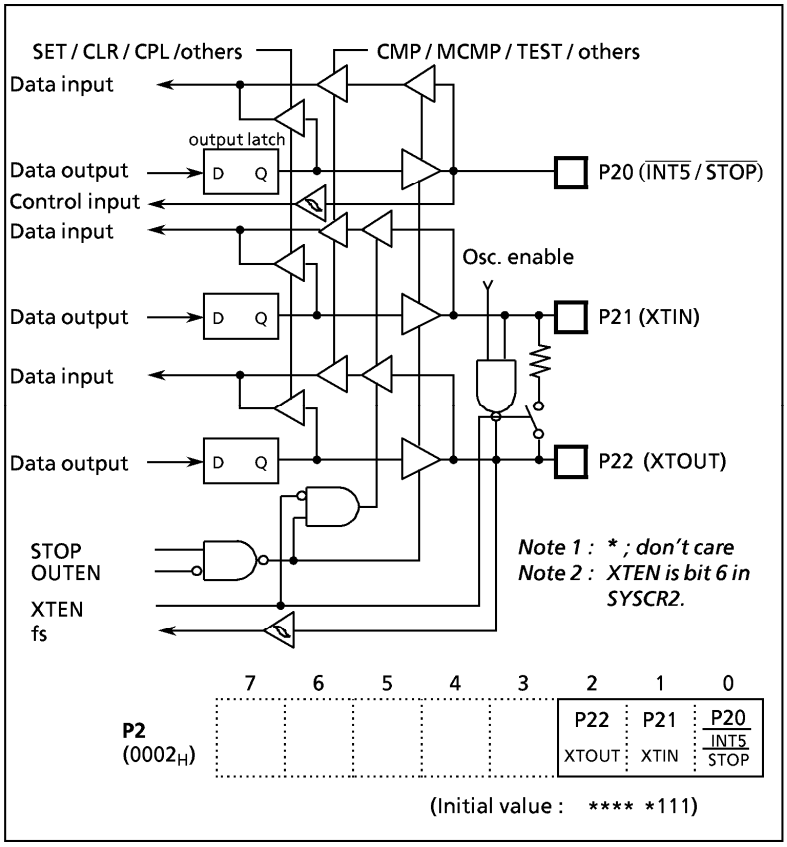

Figure 2-5. Port P2

2.2.4 Port P3 (P37 - P30)

Port P3 is an 8-bit input/output port, and is also used as serial interface input/output, an external interrupt input, and a timer/counter input. When used as an input port or a secondary function pin, the output latch should be set to "1". The output latches are initialized to "1" during reset.

Example 1: Output the immediate data $5A_H$ to the P3 port.

```
LD      (P3), 5AH        ; P3←5AH
```

Example 2: Inverts the output of the upper 4bits (P37 - P34) of the P3 port.

```
XOR     (P3), 11110000B
                         ;
P37~P34←P37~P34
```

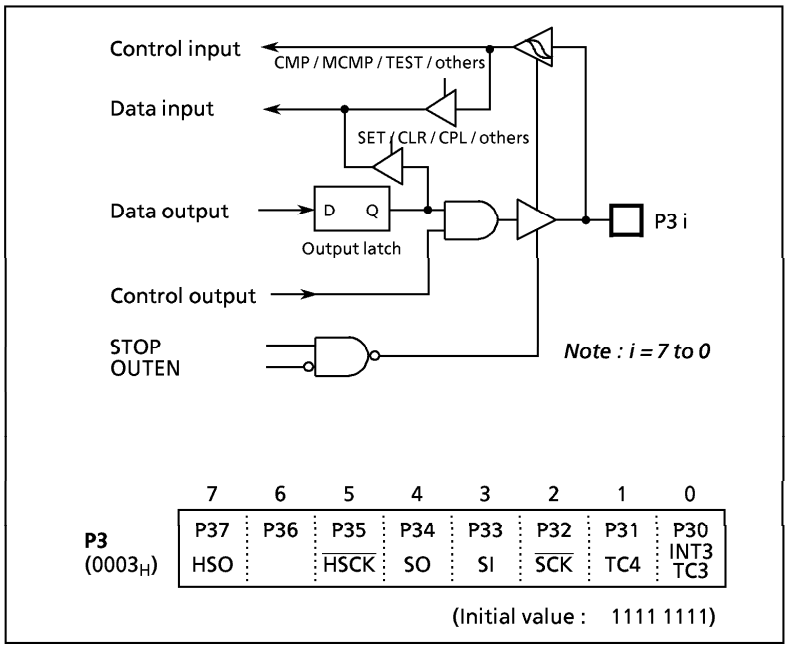

Figure 2-6. Port P3

2.2.5Port P4 (P47 - P40)

Port P4 is an 8-bit input/output port, and is also used as a key scan input and a comparator input. When used as an input port or a secondary function pin, the output latch should be set to "1". The output latches are initialized to "1" during reset.

When used key scan function, all of the port P4 bits must be used as key scan inputs or comparator inputs. When used as both comparator inputs and key scan inputs, the P47 and P46 pins are used as only comparator inputs. Bits 7 and 6 are read in as "0" when a read instruction is executed for the key scan input latches (KEYDR). Built-in pull-down resistors can also be connected for each bit using the port P4 control register (refer to section "2.12.6 (2) Key scan input pins")

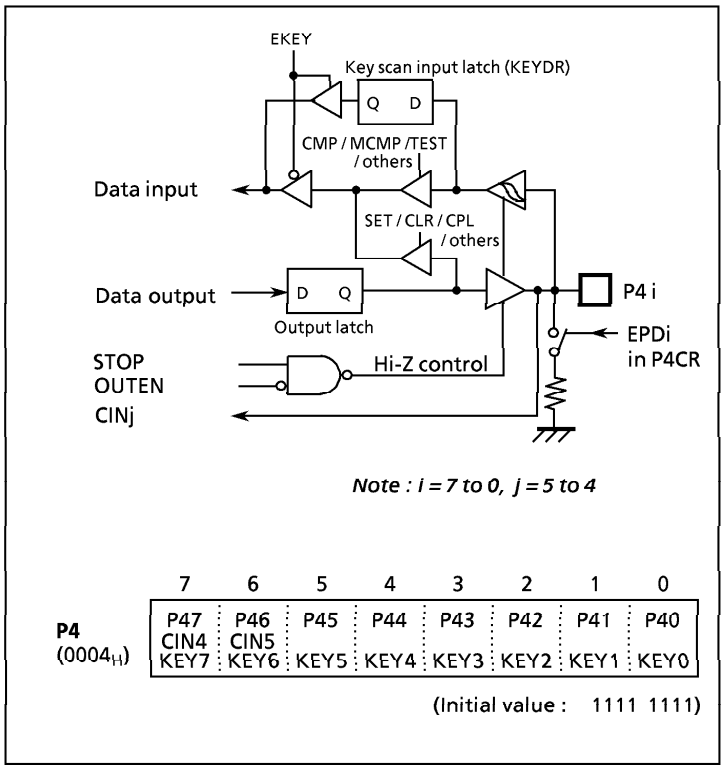

Figure 2-7. Port P4

2.2.6 Port P5 (P55 - P50)

Port P5 is a 6-bit input/output port, and is also used as a comparator input, an 8-bit PWM (Pulse Width Modulation) output and an 8-bit programmable divider output. When used as an input port or a secondary function pin, the output latch should be set to "1". The output latches are initialized to "1" during reset.

Bits 6 and 7 are read in as "1" when a read instruction is executed for the port P5.

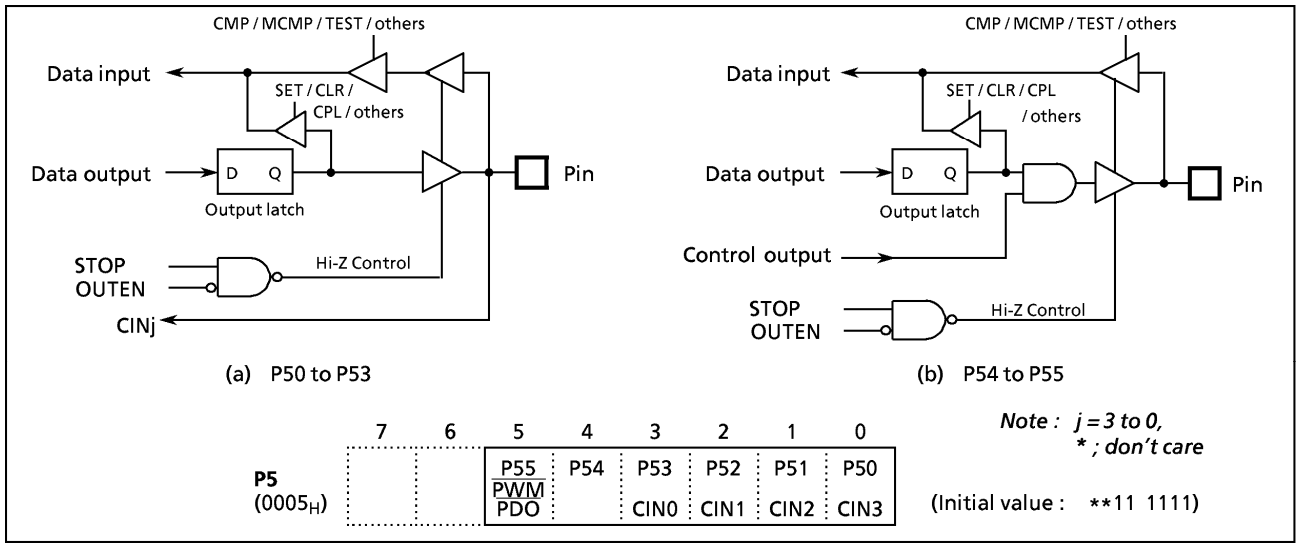

Figure 2-8. P5 Port

2.2.7 Ports P6 (P67 - P60) and P7 (P77 - P70)

Ports P6 and P7 are 8-bit high-breakdown voltage input/output ports, and are also used as digit outputs, which can directly drive vacuum fluorescent tube (VFT). When used as an input port or a digit output, the output latch should be cleared to "0". Pins which are not set for digit output can be used as normal I/O port (refer to section "2.12.6 Port Function"). The output latches are initialized to "0" during reset.

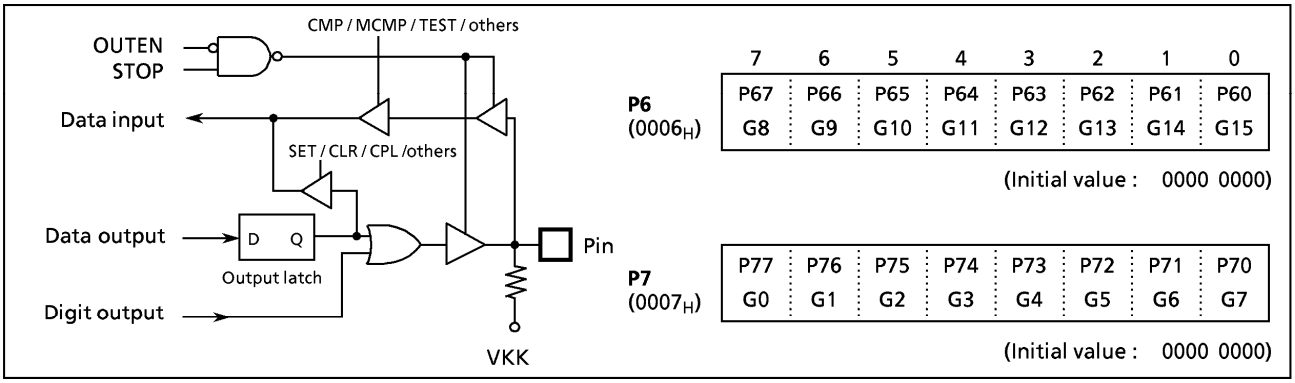

Figure 2-9. Ports P6 and P7

2.2.8 Port P8 (P87 - P80)

Port P8 is an 8-bit high-breakdown voltage output port, and also used as a segment output (or a key strobe output), which can directly drive vacuum fluorescent tube (VFT). When used as an input port or a segment (key strobe) output, the output latch should be cleared to "0". The output latches are initialized to "0" during reset.

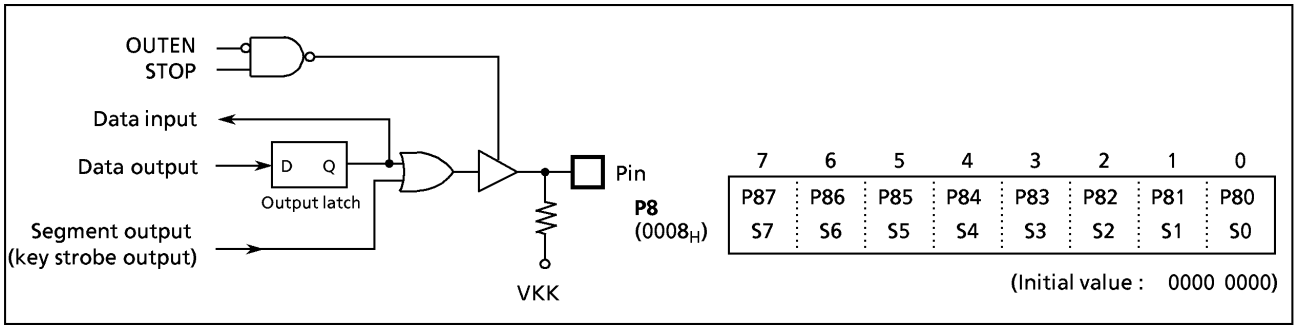

Figure 2-10. Port P8

2.2.9 Port P9 (P97 - P90)

Port P9 is an 8-bit high-breakdown voltage input/output port, and also used as a segment output (or a key strobe output), which can directly drive vacuum fluorescent tube (VFT). When used as an input port or a segment (key strobe) output, the output latch should be cleared to "0". Pins which are not set for segment output can be used as normal I/O port (refer to section "2.12.6 Port Function"). The output latches are initialized to "0" during reset.

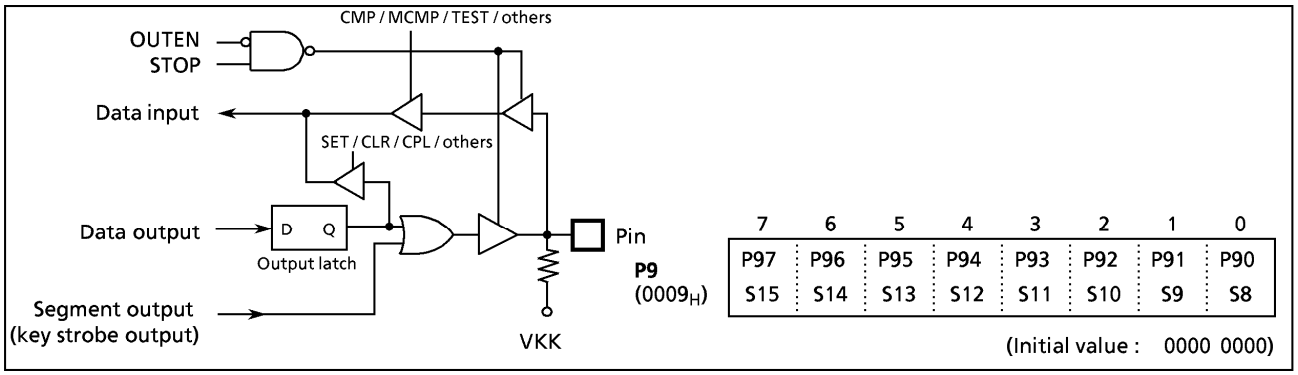

Figure 2-11. Port P9

2.3 Time Base Timer (TBT)

The time-base timer is used to generate the base time for key scan and dynamic display processing. For this purpose, it generates a time-base timer interrupt (INTTBT) at predetermined intervals.

This interrupt is generated beginning with the first rising edge of the source clock (the timing generator's divider output selected by TBTCK) after the time-base timer is enabled. Note that since the divider cannot be cleared by a program, the first interrupt only may occur earlier than the set interrupt period. (See Figure 2-12. (b).)

When selecting the interrupt frequency, make sure the time-base timer is disabled. (Do not change the selected interrupt frequency when disabling the active timer either.) However, you can select the interrupt frequency simultaneously when enabling the timer.

Example : Sets the time base timer frequency to $fc/2^{16}$ [Hz] and enables an INTTBT interrupt.

```
LD      (TBTCR) , 00001010B
SET     (EIRL) . 6
```

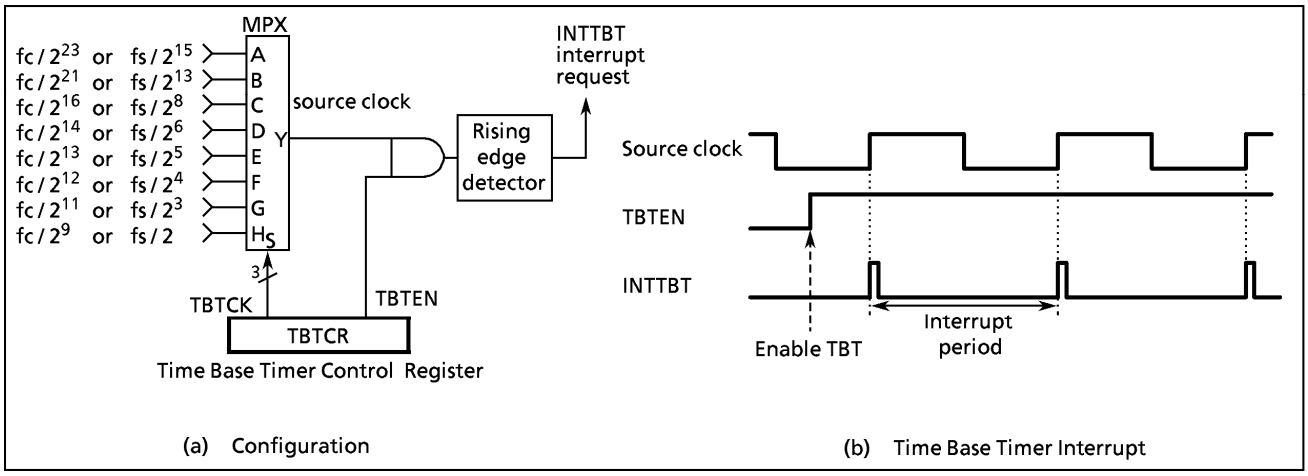

(a) Configuration (b) Time Base Timer Interrupt

Figure 2-12. Time Base Timer

TBTCR (0036_H)

7	6	5	4	3	2	1	0
(DVOEN)	(DVOCK)		(DV7CK)	TBTEN	TBTCK		

(Initial value : 0**0 0***)

TBTEN	Time base timer enable/disable	0 : Disable 1 : Enable	write only
TBTCK	Time base timer interrupt frequency select	000 : $fc/2^{23}$ or $fs/2^{15}$ [Hz] 001 : $fc/2^{21}$ or $fs/2^{13}$ 010 : $fc/2^{16}$ or $fs/2^{8}$ 011 : $fc/2^{14}$ or $fs/2^{6}$ 100 : $fc/2^{13}$ or $fs/2^{5}$ 101 : $fc/2^{12}$ or $fs/2^{4}$ 110 : $fc/2^{11}$ or $fs/2^{3}$ 111 : $fc/2^{9}$ or $fs/2$	

*Note1 : fc ; High-frequency clock [Hz], fs ; Low-frequency clock [Hz], * ; don't care*
Note2 : TBTCR is a write-only register and must not be used with any of the read-modify-write instructions.

Figure 2-13. Time Base Timer and Divider Output Control Register

Table 2-1. Time Base Timer Interrupt Frequency

TBTCK	NORMAL1/2, IDLE1/2 mode		SLOW, SLEEP mode	Interrupt Frequency	
	DV7CK = 0	DV7CK = 1		At fc = 8 MHz	At fs = 32.768 kHz
000	$fc / 2^{23}$	$fs / 2^{15}$	$fs / 2^{15}$	0.95 Hz	1 Hz
001	$fc / 2^{21}$	$fs / 2^{13}$	$fs / 2^{13}$	3.81	4
010	$fc / 2^{16}$	$fs / 2^{8}$	–	122.07	128
011	$fc / 2^{14}$	$fs / 2^{6}$	–	488.28	512
100	$fc / 2^{13}$	$fs / 2^{5}$	–	976.56	1024
101	$fc / 2^{12}$	$fs / 2^{4}$	–	1953.12	2048
110	$fc / 2^{11}$	$fs / 2^{3}$	–	3906.25	4096
111	$fc / 2^{9}$	$fs / 2$	–	15625	16384

2.4 Divider Output ($\overline{DVO}$)

A 50% duty pulse can be output using the divider output circuit, which is useful for piezo-electric buzzer drive. Divider output is from pin P13 ($\overline{DVO}$). The P13 output latch should be set to "1" and then the P13 should be configured as an output mode.

Divider output circuit is controlled by the control register (TBTCR) shown in Figure 2-14.Note that TBTCR is a write-only register, and must not be used with any of the read-modify-write instructions.

TBTCR (0036_H)

7	6	5	4	3	2	1	0
DVOEN	DVOCK		(DV7CK)	(TBTEN)	(TBTCK)		

(Initial value : 0**0 0***)

DVOEN	Divider output enable/disable	0 : Disable 1 : Enable	write only
DVOCK	Divider output ($\overline{DVO}$) frequency selection	00 : $fc / 2^{13}$ or $fs / 2^{5}$ [Hz] 01 : $fc / 2^{12}$ or $fs / 2^{4}$ 10 : $fc / 2^{11}$ or $fs / 2^{3}$ 11 : $fc / 2^{10}$ or $fs / 2^{2}$	

*Note : fc ; High-frequency clock [Hz], fs ; Low-frequency clock [Hz], * ; don't care*

Figure 2-14. Divider Output Control Register

Example : 1 kHz pulse output (at fc = 8 MHz)

```
SET     (P1).3              ; P13 output latch ←1
LD      (P1CR), 00001000B   ; Configures P13 as an output mode
LD      (TBTCR), 10000000B  ; DVOEN←1, DVOCK←00
```

Table 2-2. Frequency of Divider Output

DVOCK	Frequency of Divider Output	At fc = 8 MHz	At fs = 32 kHz
00	$fc / 2^{13}$ or $fs / 2^{5}$	0.97 [kHz]	1 [kHz]
01	$fc / 2^{12}$ $fs / 2^{4}$	1.95	2
10	$fc / 2^{11}$ $fs / 2^{3}$	3.90	4
11	$fc / 2^{10}$ $fs / 2^{2}$	7.81	8

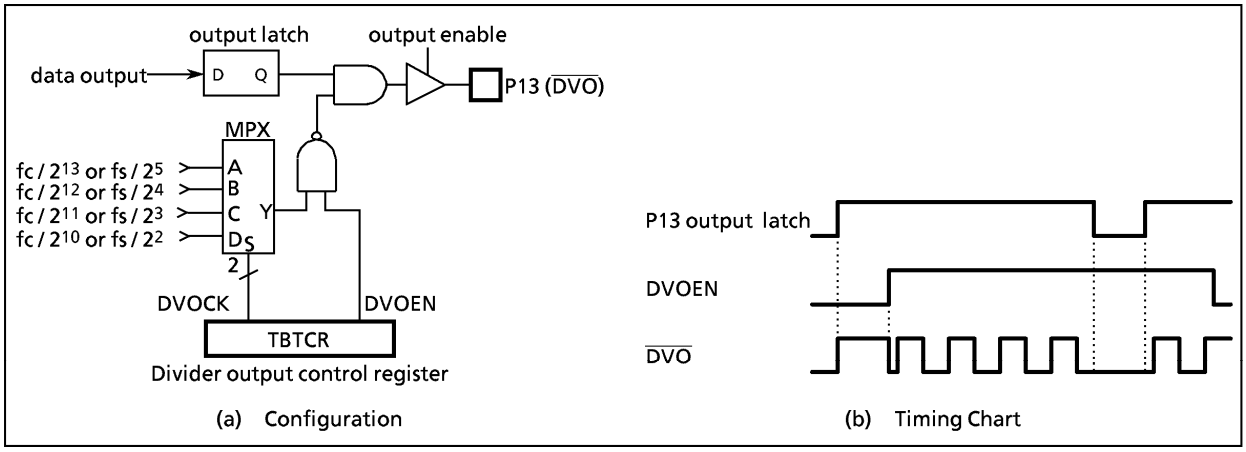

Figure 2-15. Divider Output

2.5 16-bit Timer/Counter 1 (TC1)

2.5.1 Configuration

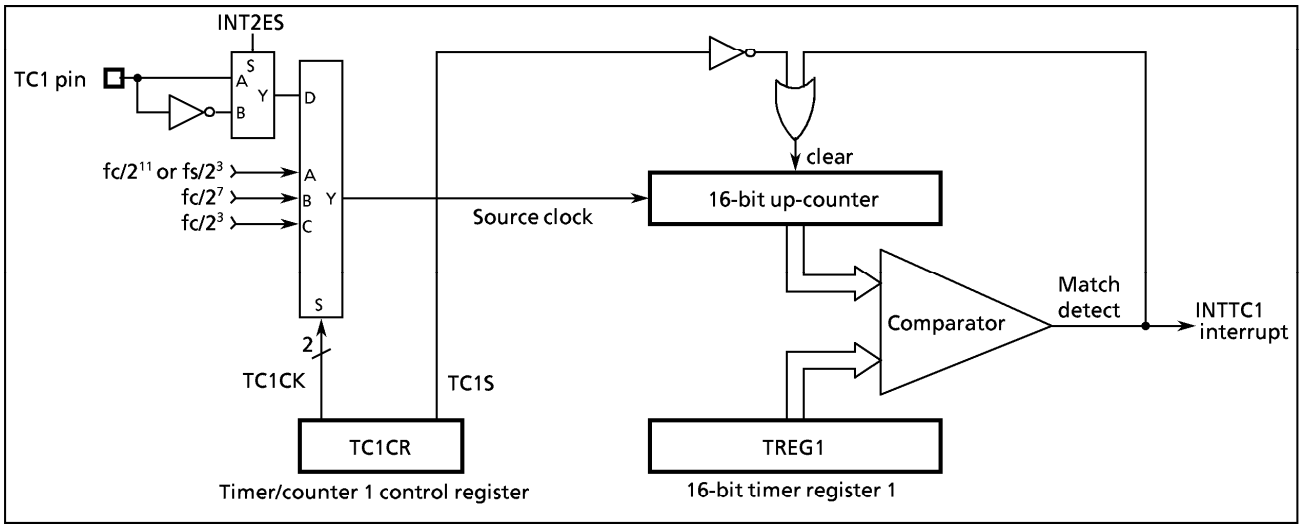

Figure 2-16. Timer/Couter 1

2.5.2 Control

The timer/counter 1 is controlled by a timer/counter 1 control register (TC1CR) and a 16-bit timer register (TREG1). Reset does not affect TREG1.

	15	14	13	12	11	10	9	8	7	6	5	4	3	2	1	0
TREG1 (0010, 0011_H)	$TREG1_H$ (0011_H)								$TREG1_L$ (0010_H)							

Write only

	7	6	5	4	3	2	1	0
TC1CR (0014_H)	"0"	"0"	"0"	TC1S	TC1K		"0"	"0"

(Initial value : ***0 0000)

TC1CK	Timer/counter 1 source clock select	00 : Internal clock $fc/2^{11}$ or $fs/2^3$ [Hz] 01 : Internal clock $fc/2^7$ 10 : Internal clock $fc/2^3$ 11 : External clock (TC1 pin input)	write only
TC1S	Timer/counter 1 start control	0 : Stop and counter clear 1 : Command start	

*Note 1 : fc; High-frequency clock [Hz], fs; Low-frequency clock [Hz], *; don't care*

Note 2 : Always write "0" to bits 0, 1, 5, 6 and 7 in TC1CR.

Note 3 : Writing to the low-byte of timer register ($TREG1_L$), the comparison is inhibited until the high-byte ($TREG1_H$) is written.
After writing to the high-byte, the comparison of 1 machine cycle (during instruction execution) is ignored.

Note 4 : Set the mode, the source clock and the edge (INT2ES) when the TC1 stops (TC1S = 0).

Note 5 : Values to be loaded to the timer register must satisfy the following condition.
TREG1 > 0

Note 6 : TC1CR and TREG1 are write-only registers which cannot be accessed by any read-modify-write instructions such as bit operate, etc.

Figure 2-17. Timer Register 1 and TC1 Control Register

2.5.3 Function

Timer/counter 1 has two operating modes: timer mode and event counter mode.

(1) **Timer** Mode

In this mode, counting up is performed using the internal clock. The contents of TREG1 are compared with the contents of up-counter. If a match is found, an INTTC1 interrupt is generated, and the counter is cleared to"0". Counting up resumes after the counter is cleared.

Table 2-3. Timer/Counter 1 Source Clock (Internal Clock)

Source clock			Resolution		Maximum time setting	
NORMAL1/2, IDLE1/2 modes		SLOW, SLEEP modes				
DV7CK = 0	DV7CK = 1		At fc = 8 MHz	At fs = 32.768 kHz	At fc = 8 MHz	At fs = 32.768 kHz
$fc/2^3$ [Hz]	$fc/2^3$ [Hz]	–	1 μs		65.5 ms	
$fc/2^7$	$fc/2^7$	–	16 μs		1.0 s	
$fc/2^{11}$	$fs/2^3$	$fs/2^3$ [Hz]	256 μs	244.14 μs	16.7 s	16.0 s

Example : Sets the timer mode with source clock fs/2^3[Hz] and generates an interrupt 1 s. later (at fs = 32.768 kHz).

```
LD      (TC1CR), 00000000B      ; Sets the TC1 mode and source clock
LDW     (TREG1), 1000H          ; Sets the timer register (1s ÷ 2^3 / fs = 1000_H)
LD      (TC1CR), 00010000B      ; Starts TC1
```

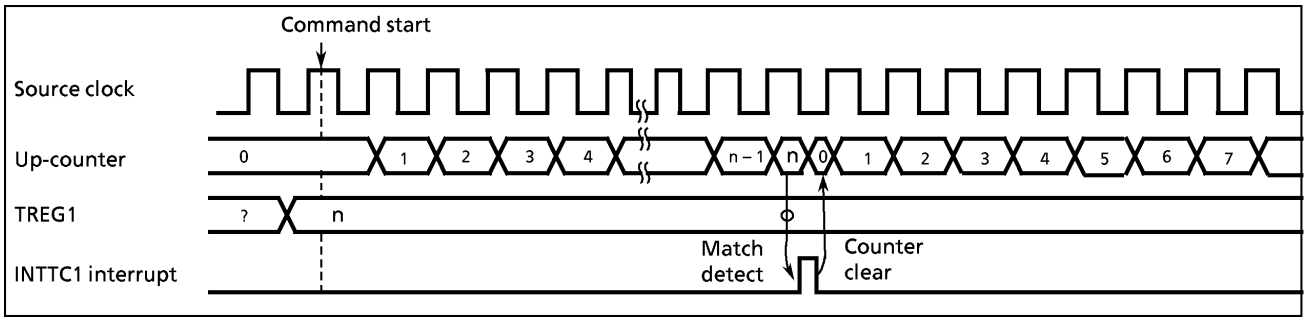

Figure 2-18. Timer Mode Timing Chart

(2) **Event Counter** Mode

In this mode, events are counted on the edge of the TC1 pin input. Either the rising or falling edge can be selected with INT2ES in EINTCR. The contents of TREG1 are compared with the contents of the up-counter. If a match is found, an INTTC1 interrupt is generated, and the counter is cleared. The maximum applied frequency is fc/2^4 [Hz] in NORMAL1/2 or IDLE1/2 mode and fs/2^4 [Hz] in SLOW or SLEEP mode.

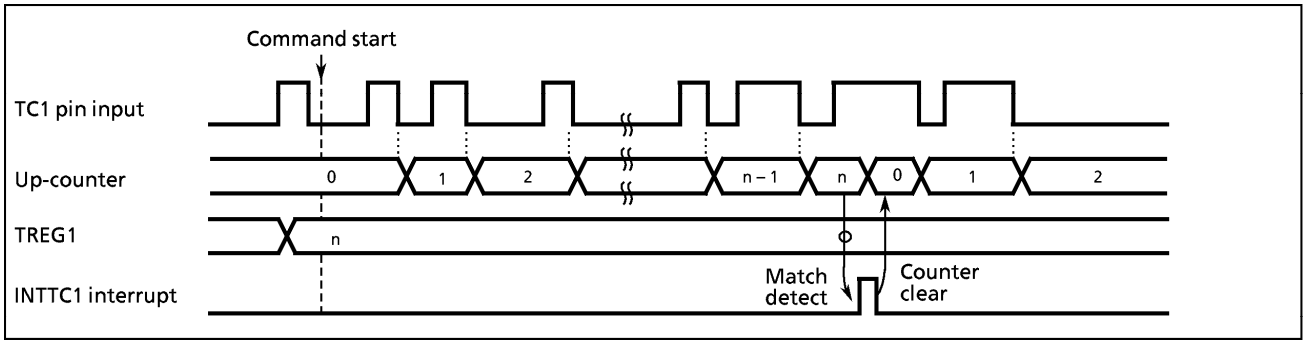

Figure 2-19. Event Counter Mode Timing Chart (INT2ES = 1)

2.6 16-bit Timer/Counter 2 (TC2)

2.6.1 Configuration

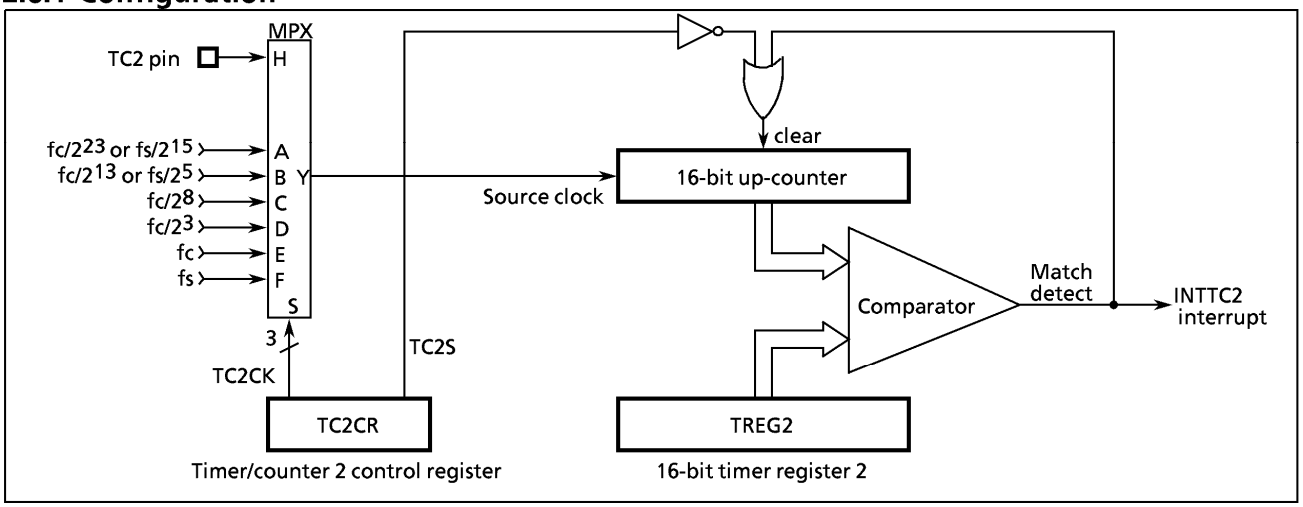

Figure 2-20. Timer/Counter 2

2.6.2 Control

The timer/counter 2 is controlled by a timer/counter 2 control register (TC2CR) and a 16-bit timer register 2 (TREG2). Reset does not affect TREG2.

TREG2 (0016, 0017_H)

15	14	13	12	11	10	9	8	7	6	5	4	3	2	1	0
$TREG2_H$ (0017_H)								$TREG2_L$ (0016_H)							

write only

TC2CR (0015_H)

7	6	5	4	3	2	1	0
"0"	"0"	TC2S	TC2CK			"0"	"0"

(Initial value : **00 00**)

TC2CK	Timer/counter 2 source clock select	000 : Internal clock $fc/2^{23}$ or $fs/2^{15}$ [Hz] 001 : Internal clock $fc/2^{13}$ or $fs/2^{5}$ 010 : Internal clock $fc/2^{8}$ 011 : Internal clock $fc/2^{3}$ 100 : Internal clock fc (Note 5) 101 : Internal clock fs 110 : Reserved 111 : External clock (TC2 pin input)	write only
TC2S	Timer/counter 2 start control	0 : Stop and counter clear 1 : Start	

*Note 1 : fc; High-frequency clock [Hz], fs; Low-frequency clock [Hz], *; don't care*

Note 2 : When writing to the low-byte of timer register 2 ($TREG2_L$), the comparison is inhibited until the high-byte ($TREG2_H$) is written. After writing to the high-byte, any match during 1 machine cycle (instruction execution cycle) is ignored.

Note 3 : Set the mode and source clock when timer/counter stop (TC2S = 0).

Note 4 : Values to be loaded to the timer register must satisfy the following condition.
$TREG2 > 0$ ($TREG2_{15\ to\ 11} > 0$ when warm-up).

Note 5 : "fc" can be selected as the source clock only in the timer mode during SLOW mode.

Note 6 : Always write "0" to bit 0, 1, 6 and 7 in TC2CR.

Note 7 : TC2CR and TREG2 are write-only registers and must not be used with any of read-modify-write instructions.

Figure 2-21. Timer Register 2 and TC2 Control Register

2.6.3 Function

The timer/counter 2 has two operating modes: timer and event counter mode. Also timer/counter 2 is used for warm-up when switching from SLOW mode to NORMAL2 mode.

(1) **Timer** Mode

In this mode, the internal clock is used for counting up. The contents of timer register 2 (TREG2) are compared with the contents of the up-counter. If a match is found, a timer/ counter 2 interrupt (INTTC2) is generated, and the counter is cleared. Counting up is resumed after the up-counter is cleared.

Also, when fc is selected as the source clock during SLOW mode, the lower 11 bits of TREG2 are ignored and an INTTC2 interrupt is generated by matching the upper 5 bits. Thus, in this case, only the $TREG2_H$ setting is necessary.

Table 2-4. Source Clock (Internal Clock) for Timer/Counter 2

Source clock				Resolution		Maximum time setting	
NORMAL1/2, IDLE1/2 mode		SLOW mode	SLEEP mode				
DV7CK = 0	DV7CK = 1			At fc = 8 MHz	At fs = 32.768 kHz	At fc = 8 MHz	At fs = 32.768 kHz
$fc / 2^{23}$[Hz]	$fs / 2^{15}$[Hz]	$fs / 2^{15}$ [Hz]	$fs / 2^{15}$ [Hz]	1.05 s	1 s	19.1 h	18.2 h
$fc / 2^{13}$	$fs / 2^{5}$	$fs / 2^{5}$	$fs / 2^{5}$	1.02 ms	1 ms	1.1 min	1 min
$fc / 2^{8}$	$fc / 2^{8}$	–	–	32 μs	–	2.1 s	–
$fc / 2^{3}$	$fc / 2^{3}$	–	–	1 μs	–	65.5 ms	–
–	–	fc (Note)	–	125 ns	–	7.9 ms	–
fs	fs	–	–	–	30.5 μs	–	2 s

Note : "fc" can be used only in the timer mode when switching from the SLOW mode to the NORMAL2 mode.

Example : Sets the timer mode with source clock $fc/2^3$ [Hz] and generates an interrupt every 25 ms (at fc = 8 MHz).

```
LD      (TC2CR), 00001100B      ; Sets the TC2 mode and source clock
LDW     (TREG2), 61A8H          ; Sets TREG2 (25 ms ÷ 2^3/fc = 61A8H)
LD      (TC2CR), 00101100B      ; Starts TC2
```

(2) **Event Counter** Mode

In this mode, events are counted on the rising edge of the TC2 pin input. The contents of TREG2 are compared with the contents of the up-counter. If a match is found, an INTTC2 interrupt is generated, and the counter is cleared. The maximum frequency applied to the TC2 pin is $fc/2^4$ [Hz] in NORMAL1/2 or IDLE1/2 mode, and $fs/2^4$ [Hz] in SLOW or SLEEP mode.

Example : Sets the event counter mode and generates an INTT2 interrupt 640 counts later.

```
LD      (TC2CR), 00011100B      ; Sets the TC2 mode
LDW     (TREG2), 0280H          ; Sets TREG2
LD      (TC2CR), 00111100B      ; Starts TC2
```

2.7 8-Bit Timer/Counter 3 (TC3)

2.7.1 Configuration

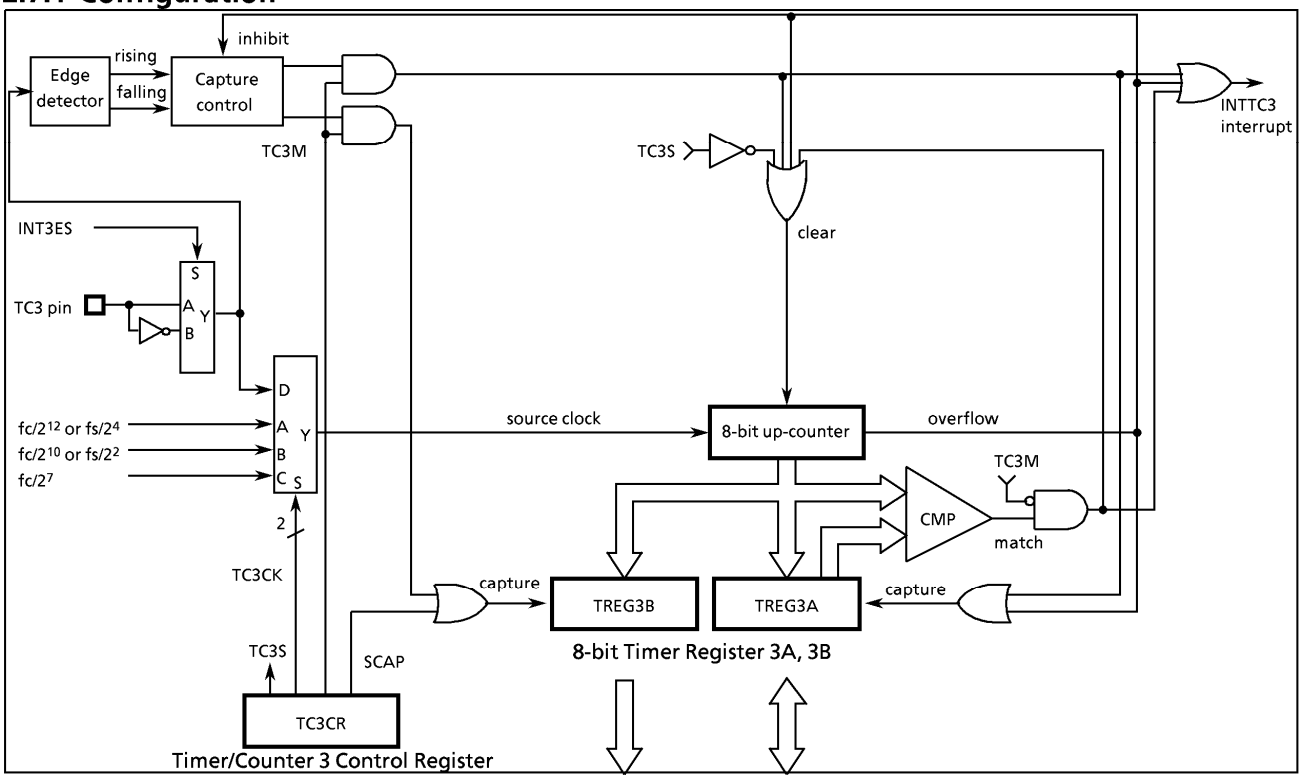

Figure 2-22. Timer/Counter 3

2.7.2 Control

The timer/counter 3 is controlled by a timer/counter 3 control register (TC3CR) and two 8-bit timer registers (TREG3A and TREG3B). Reset does not affect these timer registers.

	7	6	5	4	3	2	1	0	
TREG3A (0018_H)									Read/Write
TREG3B (0019_H)									Read only
TC3CR ($001A_H$)		SCAP		TC3S	TC3CK			TC3M	(Initial value : *0*0 00*0)

TC3M	Timer/counter 3 operation mode set	0 : Timer/event counter 1 : Capture	write only
TC3CK	Timer/counter 3 source clock select	00 : Internal clock fc / 2^{12} or fs / 2^4 [Hz] 01 : Internal clock fc / 2^{10} or fs / 2^2 10 : Internal clock fc / 2^7 11 : External clock (TC3 pin input)	
TC3S	Timer/counter 3 start select	0 : Stop & clear 1 : Start	
SCAP	Software capture control	0 : – 1 : Software capture	

*Note 1 : fc ; High-frequency clock [Hz] fs ; Low-frequency clock [Hz] * ; don't care*
Note 2 : Set the mode, the source clock and the edge when the TC3 stops (TC3S = 0).
Note 3 : Values to be loaded into timer register 3A must satisfy the following condition.
TREG3A > 0 (in the timer/event counter mode)
Note 4 : TC3CR is a write-only register and must not be used with any of read-modify-write instructions.

Figure 2-23. Timer Register 3 and TC3 Control Register

2.7.3 Function

The timer/counter 3 has three operating modes : timer, event counter, and capture mode.

(1) **Timer** Mode

In this mode, the internal clock is used for counting up. The contents of TREG3A are compared with the contents of up-counter. If a match is found, a timer/counter 3 interrupt (INTTC3) is generated, and the up-counter is cleared. Counting up resumes after the up-counter is cleared. The current contents of up-counter are loaded into TREG3B by setting SCAP (bit 6 in TC3CR) to "1". SCAP is automatically cleared after capturing.

Table 2-5. Source Clock (Internal Clock) for Timer Counter 3

Source clock		Resolution		Maximum setting time	
NORMAL1/2, IDLE1/2 mode	SLOW, SLEEP mode	fc = 8 MHz	fs = 32.768 kHz	fc = 8 MHz	fs = 32.768 kHz
$fc/2^{12}$ or $fs/2^{4}$ [Hz]	$fs/2^{4}$ [Hz]	512 μs	488.28 μs	131.1 ms	125 ms
$fc/2^{10}$ or $fs/2^{2}$	–	128 μs	122.07 μs	32.8 ms	31.25 ms
$fc/2^{7}$	–	16 μs	–	4.1 ms	–

(2) **Event Counter** Mode

In this mode, the TC3 pin input pulses are used for counting up. Either the rising or falling edge can be selected with INT3ES (bit 3 in EINTCR). The contents of TREG3A are compared with the contents of the up-counter. If a match is found, an INTTC3 interrupt is generated and the counter is cleared. The maximum applied frequency is $fc/2^4$ [Hz] in the NORMAL1/2 or IDLE1/2 mode, and $fs/2^4$ [Hz] in SLOW or SLEEP mode. Two or more machine cycles are required for both the "H" and "L" levels of the pulse width.

The current contents of up-counter are loaded into TREG3B by setting SCAP (bit 6 in TC3CR) to "1". SCAP is automatically cleared after capturing.

Example : Generates an interrupt every 0.5 s, inputing 50 Hz pulses to the TC3 pin.

```
LD    (TC3CR) , 00001100B   ;  Sets TC3 mode and source clock
LD    (TREG3A) , 19H        ;  0.5 s ÷ 1 / 50 = 25 = 19H
SET   (EIRH). EF8           ;  Enables INTTC3
EI
LD    (TC3CR) , 00011100B   ;  Start TC3
```

(3) **Capture** Mode

The pulse width, period and duty of the TC3 pin input are measured in this mode, which can be used in decoding the remote control signals, etc. The counter is free running by the internal clock. On the rising (falling) edge of the TC3 pin input, the current contents of counter is loaded into TREG3A, then the up-counter is cleared and an INTTC3 interrupt is generated. On the falling (rising) edge of the TC3 pin input, the current contents of the counter is loaded into the TREG3B. In this case, counting continues. At the next rising (falling) edge of the TC3 pin input, the current contents of counter are loaded into TREG3A, then the counter is cleared again and an interrupt is generated. If the counter overflows before the edge is detected, FF_H is set to the TREG3A and an overflow interrupt (INTTC3) is generated. During interrupt processing, it can be determined whether or not there is an overflow by checking whether or not the TREG3A value is FF_H. Also, after an interrupt (capture to TREG3A, or overflow detection) is generated, capture and overflow detection are halted until TREG3A has been read out; however, the counter continues.

After TREG3A has been read out, capture and overflow detection are resumed, usually, TREG3B is read out first.

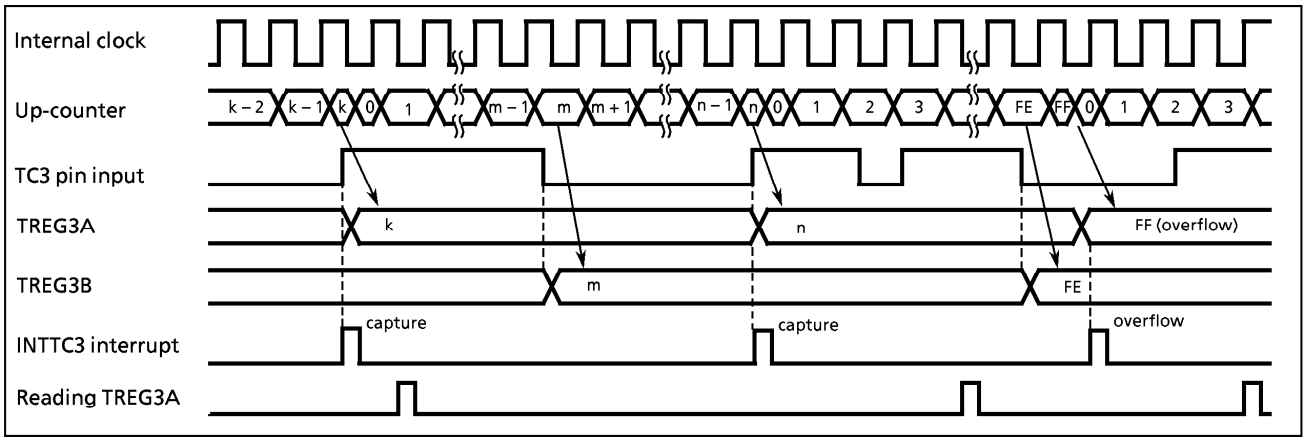

Figure 2-27. Timing Chart for Capture Mode (INT3ES = 0)

2.8.2 Control

The timer/counter 4 is controlled by a timer/counter 4 control register (TC4CR) and an 8-bit timer register 4 (TREG4). Reset does not affect TREG4.

TREG4 ($001B_H$) — Write only

TC4CR ($001C_H$) — (Initial value : 00*0 0000)

7	6	5	4	3	2	1	0
TFF4			TC4S	TC4CK		TC4M	

TC4M	TC4 operating mode select	00 : Timer/event counter mode 01 : Reserved 10 : Programmable divider output (PDO) mode 11 : Pulse width modulation (PWM) output mode	write only
TC4CK	TC4 source clock select	00 : Internal clock fc / 2^{11} or fs / 2^3[Hz] 01 : Internal clock fc / 2^7 10 : Internal clock fc / 2^3 11 : External clock (TC4 pin input)	
TC4S	TC4 start control	0 : Stop & clear 1 : Start	
TFF4	Timer F/F 4 control	00 : Clear 01 : Toggle 10 : Set 11 : – (Note 3)	

EINTCR (0037_H) — (Initial value : 00*0 000*)

7	6	5	4	3	2	1	0
(INT1 NC)	(INT0 EN)		TC4 ES	(INT3 ES)	(INT2 ES)	(INT1 ES)	

TC4ES	TC4 input edge select	0 : Rising edge 1 : Falling edge	write only

*Note 1 : fc; High-frequency clock [Hz], fs; Low-frequency clock [Hz], *; don't care*

Note 2 : Set the operating mode, the source clock selection and, the timer F/F 4 control and the edge (TC4ES) when the TC4 stops (TC4S = 0).

Note 3 : TFF4 must be set to "11" in the timer and event counter modes.

Note 4 : Values to be loaded to the timer register must satisfy the following condition.
TREG4 > 0

Note 5 : TC4CR and TREG4 are write-only registers and must not be used with any of read-modify-write instructions.

Figure 2-26. Timer Register 4 and TC4 Control Register

2.8.3 Function

The timer/counter 4 has four operating modes : timer, event counter, programmable divider output, and PWM output mode.

(1) **Timer** Mode

In this mode, the internal clock is used for counting up. The contents of timer register 4 (TREG4) are compared with the contents of the up-counter. If a match is found, a timer/counter 4 interrupt (INTTC4) is generated and the counter is cleared. Counting up resumes after the up-counter is cleared.

Table 2-6. Source Clock (Internal Clock) for Timer/Counter 4

Source clock			Resolution		Maximum setting time	
NORMAL1/2, IDLE1/2 mode		SLOW, SLEEP mode				
DV7CK = 0	DV7CK = 1		At fc = 8 MHz	At fs = 32.768 kHz	At fc = 8 MHz	At fs = 32.768 kHz
$fc / 2^{11}$	$fs / 2^3$ [Hz]	$fs / 2^3$ [Hz]	256 μs	244.14 μs	65.536 ms	62.5 ms
$fc / 2^7$	$fc / 2^7$	–	16 μs	–	4.096 ms	–
$fc / 2^3$	$fc / 2^3$	–	1 μs	–	256 μs	–

(2) **Event Counter** Mode

In this mode, the TC4 pin input (external clock) pulse is used for counting up. Either the rising or falling edge can be selected with TC4ES (bit 4 in EINTCR). The contents of TREG4 are compared with the contents of the up-counter. If a match is found, an INTTC4 interrupt is generated and the counter is cleared. The maximum applied frequency is $fc/2^4$ [Hz] in NORMAL1/2 or IDLE1/2 mode, and $fs/2^4$ [Hz] in SLOW or SLEEP mode. Two or more machine cycles are required for both the high and low levels of the pulse width.

(3) **Programmable Divider Output** (PDO) Mode

The internal clock is used for counting up. The contents of TREG4 are compared with the contents of the up-counter. Timer F/F 4 output is toggled and the counter is cleared each time a match is found. Timer F/F 4 output is inverted and output to the $\overline{PDO}$ (P55) pin. This mode can be used for 50% duty pulse output. Timer F/F 4 can be initialized by program, and it is initialized to "0" during reset. An INTTC4 interrupt is generated each time the $\overline{PDO}$ output is toggled.

Example : Output a 1024 Hz pulse (At fc = 4.194304 MHz)

```
LD      (TC4CR), 00000110B    ; Initializes the TC4 mode, source clock and timer F/F 4.
LD      (TREG4), 10H          ; (1/1024 ÷ 2^7/fc) ÷ 2 = 10H
LD      (TC4CR), 00010110B    ; Starts TC4
```

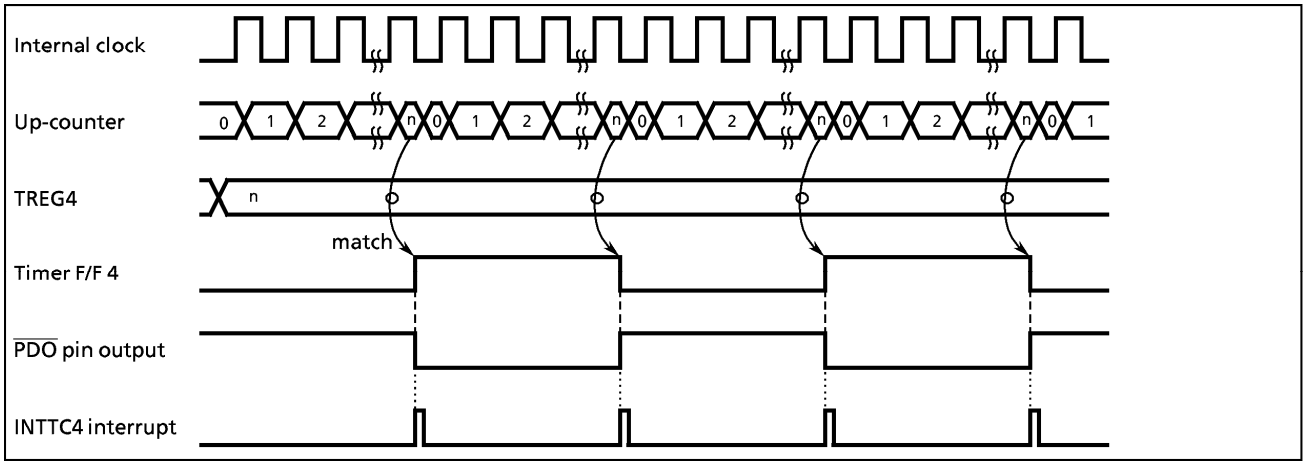

Figure 2-27. Timing Chart for PDO Mode

(4) **Pulse Width Modulation** (PWM) **Output** Mode

PWM output with a resolution of 8 bits is possible. The internal clock is used for counting up. The contents of the TREG4 are compared with the contents of the up-counter. If a match is found, the timer F/F 4 output is toggled. The counter continues counting. And, when an overflow occurs, the timer F/F4 output is again toggled and the counter is cleared. Timer F/F 4 output is inverted and output to the $\overline{PWM}$ (P55) pin. An INTTC4 interrupt is generated when an overflow occurs.
TREG4 is configured a 2-stage shift register and, during output, will not switch until one output cycle is completed even if TREG4 is overwritten; therefore, output can be altered continuously. Also, the first time, TREG4 is shifted by setting TC4S (bit 4 in TC4CR) to "1" after data is loaded to TREG4.

Note 1 : Do not overwrite TREG4 only when an INTTC4 interrupt is generated. Usually, TREG4 is overwritten in the routine of INTTC4 interrupt service.
Note 2 : PWM output mode can be used only in the NORMAL 1, 2, and IDLE 1, 2 mode.

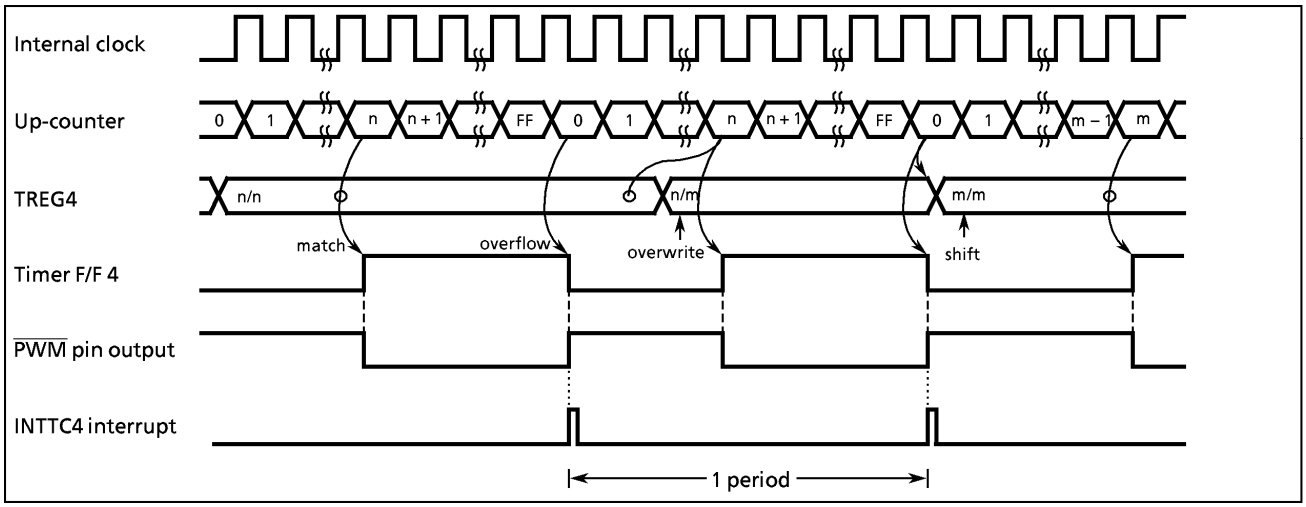

Figure 2-28. Timing Chart for PWM Mode

Table 2-7. PWM Output Mode

Source clock			Resolution		Repeat cycle	
NORMAL1/2, IDLE1/2 mode		SLOW, SLEEP mode				
DV7CK = 0	DV7CK = 1		At fc = 8 MHz	At fs = 32.768 kHz	At fc = 8 MHz	At fs = 32.768 kHz
$fc / 2^{11}$ [Hz]	$fs / 2^{3}$ [Hz]	$fs / 2^{3}$ [Hz]	256 μs	244.14 μs	65.536 ms	62.5 ms
$fc / 2^{7}$	$fc / 2^{7}$	–	16 μs	–	4.096 ms	–
$fc / 2^{3}$	$fc / 2^{3}$	–	1 μs	–	256 μs	–

2.9 Serial Interface (SIO)

The 87CM71/N71/P71/S71 each have a clocked-synchronous 8-bit serial interface (SIO). The SIO has an 8-byte transmit and receive data buffer that can automatically and continuously transfer up to 64 bits of data.

The SIO is connected to external devices via pins P32 ($\overline{SCK}$), P33 (SI) and P34 (SO). The serial interface pins are also used as port P3. When used as serial interface pins, the P34-P32 output latches should be set to "1". In the transmit mode, pin P33 is used as a normal I/O port, and in the receive mode, pin P34 is used as a normal I/O port.

2.9.1 Configuration

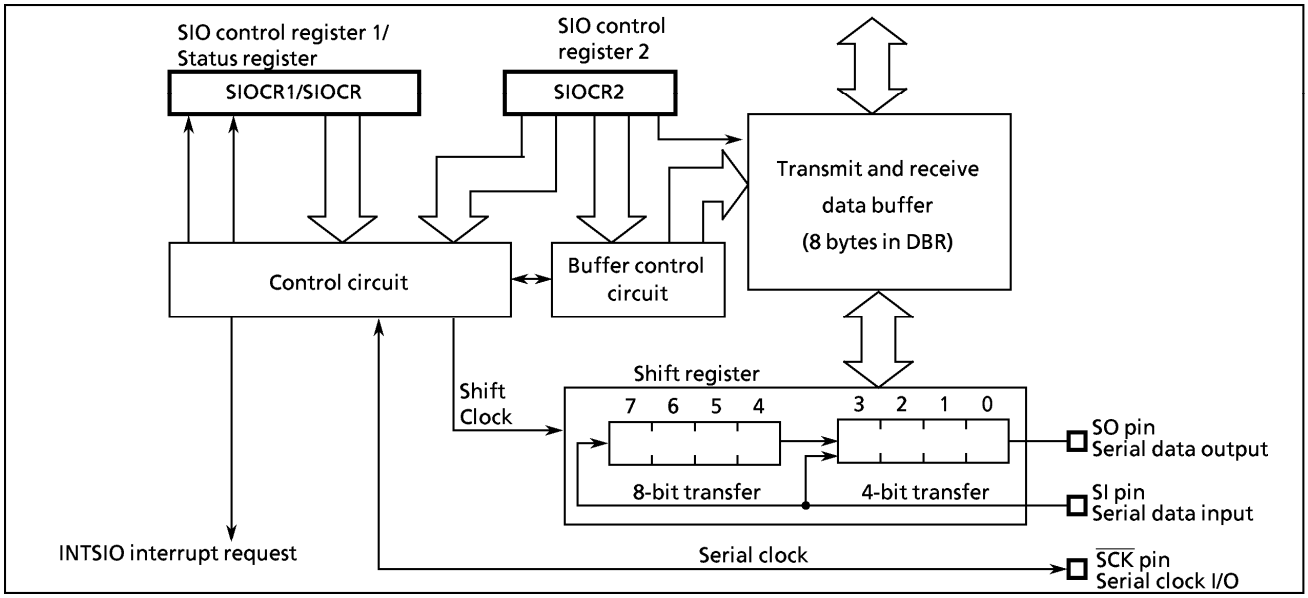

Figure 2-29. Serial Interface

2.9.2 Control

The SIO is controlled by two SIO control registers (SIOCR1 and SIOCR2). The serial interface status can be determined by reading a SIO status register (SIOSR).

The transmit and receive data buffer is controlled by the SIOCR2. The data buffer is assigned to addresses $0FF0_H$ - $0FF7_H$ in the DBR (data buffer registers) area, and can continuously transfer up to 8 words (bytes or nibbles) at one time. When the specified number of words has been transferred, a buffer empty (in the transmit mode) or a buffer full (in the receive mode or transmit/receive mode) interrupt (INTSIO) is generated.

When the internal clock is used as the serial clock in the 8-bit receive mode and the 8-bit transmit/receive mode, a fixed interval wait can be applied to the serial clock for each word transferred. Four different wait times can be selected with SIOCR2.

SIO Control Register 1

SIOCR1 (0020_H)

7	6	5	4	3	2	1	0
SIOS	SIO INH	SIOM			SCK		

(Initial value : 0000 0000)

SIOS	Indicate transfer start/stop	0 : Stop 1 : Start	write only
SIOINH	Continue/abort transfer	0 : Continue transfer 1 : Abort transfer (automatically cleared after abort)	
SIOM	Transfer mode select	000 : 8-bit transmit mode 010 : 4-bit transmit mode 100 : 8-bit transmit/receive or receive mode (Note 1) 110 : 4-bit receive mode **1 : reserved	
SCK	Serial clock select	000 : Internal clock fc / 2^{13} or fs / 2^5 [Hz] 001 : Internal clock fc / 2^8 010 : Internal clock fc / 2^6 011 : Internal clock fc / 2^5 (Output on $\overline{SCK}$ pin) 111 : External clock (input from $\overline{SCK}$ pin)	

Note 1 : Transmit/receive or receive mode are selected with ERM in SIOCR2.
Note 2 : Set SIOS to "0" and SIOINH to "1" when setting the transfer mode or serial clock.
Note 3 : fc ; High-frequency clock [Hz], fs ; Low-frequency clock [Hz]
Note 4 : SIOCR1 is write-only register, which can not access any of in read- modify-write instruction such as bit operate, etc.

SIO Status Register

SIOSR (0020_H)

7	6	5	4	3	2	1	0
SIOF	SEF	"1"	"1"	"1"	"1"	"1"	"1"

SIOF	Serial transfer operating status monitor	0 : Transfer terminated 1 : Transfer in process (After SIOS is cleared to "0", SIOF is cleared to "0" at the termination of transfer or setting of SIOINH.)	read only
SEF	Shift operating status monitor	0 : Shift operation terminated 1 : Shift operation in process	

SIO Control Register 2

SIOCR2 (0021_H)

7	6	5	4	3	2	1	0
		ERM	WAIT		BUF		

(Initial value : **00 0000)

ERM	8-bit transmit/receive mode control	0 : Transmit/receive mode 1 : Receive mode (Always set to "0" except in the 8-bit receive mode.)	write only
WAIT	Wait control	00 : $T_f = T_D$ (no waits) 01 : $T_f = 2T_D$ 10 : $T_f = 4T_D$ 11 : $T_f = 8T_D$ (waits)	
BUF	Number of transfer words	Buffer addresses used 000 : 1-word transfer $0FF0_H$ 001 : 2-word transfer 0FF0 – $0FF1_H$ 010 : 3-word transfer 0FF0 – $0FF2_H$ 011 : 4-word transfer 0FF0 – $0FF3_H$ 100 : 5-word transfer 0FF0 – $0FF4_H$ 101 : 6-word transfer 0FF0 – $0FF5_H$ 110 : 7-word transfer 0FF0 – $0FF6_H$ 111 : 8-word transfer 0FF0 – $0FF7_H$	

*Note 1 : * ; don't care*

Note 2 : The 8-bit receive mode can be set by setting ERM to "1" after setting SIOM (bits 5 to 3 in SIOCR1) to "100".

Note 3 : WAIT is effective only in the 8-bit transmit/receive mode and 8-bit receive mode. Always set to "00" except in these modes.

Note 4 : T_f ; frame time (time required to transfer 1 word of data), T_D ; data transfer time.

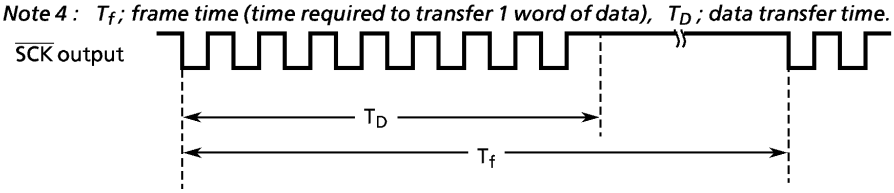

Note 5 : In the 4-bit transfers the lower 4 bits of each buffer are used. Zeros (0) are stored to the upper 4 bits when receiving.

Note 6 : Transmission starts from the lowest buffer address. Received data are stored starting from the lowest buffer address.

Note 7 : The value to be loaded to BUF is held after transfer is completed.

Note 8 : SIOCR2 is write-only register, which cannot access any of in read-modify-write instruction such as bit operate, etc.

Figure 2-30. SIO Control Registers and Status Register

(1) Serial Clock

a. Clock Source

SCK (bits 2 - 0 in SIOCR1) is able to select the following:

① Internal Clock

Any of four frequencies can be selected. The serial clock is output to the outside from the $\overline{SCK}$ pin. The $\overline{SCK}$ pin is raised to high when transfer starts.

When data writing (in the transmit mode) or reading (in the receive mode and the transmit/receive mode) cannot keep up with the serial clock rate, there is a wait function that automatically stops the serial clock and holds the next shift operation until the read/write processing is completed.

Table 2-8. Serial Clock Rate

Serial clock			Maximum transfer srate	
NORMAL1/2, IDLE1/2 mode		SLOW, SLEEP mode		
DV7CK = 0	DV7CK = 1		At fc = 8 MHz	At fs = 32.768 kHz
$fc / 2^{13}$ [Hz]	$fs / 2^5$ [Hz]	$fs / 2^5$ [Hz]	0.977 Kbit/s	1 Kbit/s
$fc / 2^8$	$fc / 2^8$	–	31.2	–
$fc / 2^6$	$fc / 2^6$	–	125	–
$fc / 2^5$	$fc / 2^5$	–	250	–

Note : 1Kbit = 1024 bit

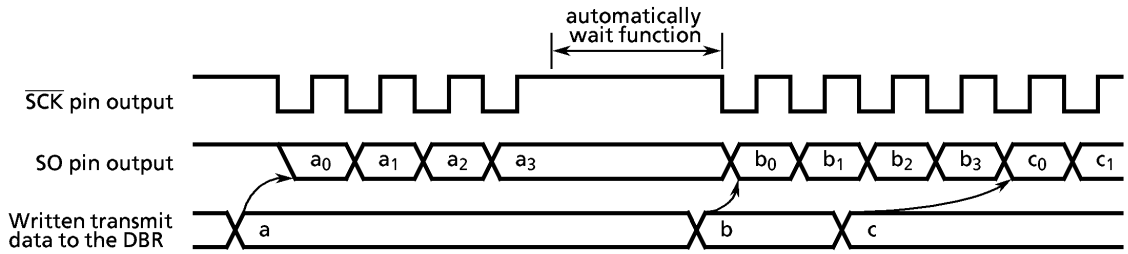

Figure 2-31. Clock Source (Internal Clock)

② External Clock

An external clock connected to the $\overline{SCK}$ pin is used as the serial clock. In this case, the P32 ($\overline{SCK}$) output latch must be set to "1". To ensure shifting, a pulse width of at least 4 machine cycles is required. Thus, the maximum transfer speed is 244K-bit/s. (at fc = 8 MHz).

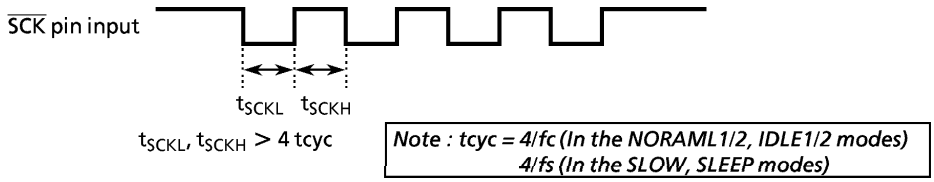

b. Shift edge

The leading edge is used to transmit, and the trailing edge is used to receive.

① Leading Edge

Transmitted data are shifted on the leading edge of the serial clock (falling edge of the $\overline{SCK}$ pin input/output).

② Trailing Edge

Received data are shifted on the trailing edge of the serial clock (rising edge of the $\overline{SCK}$ pin input/output).

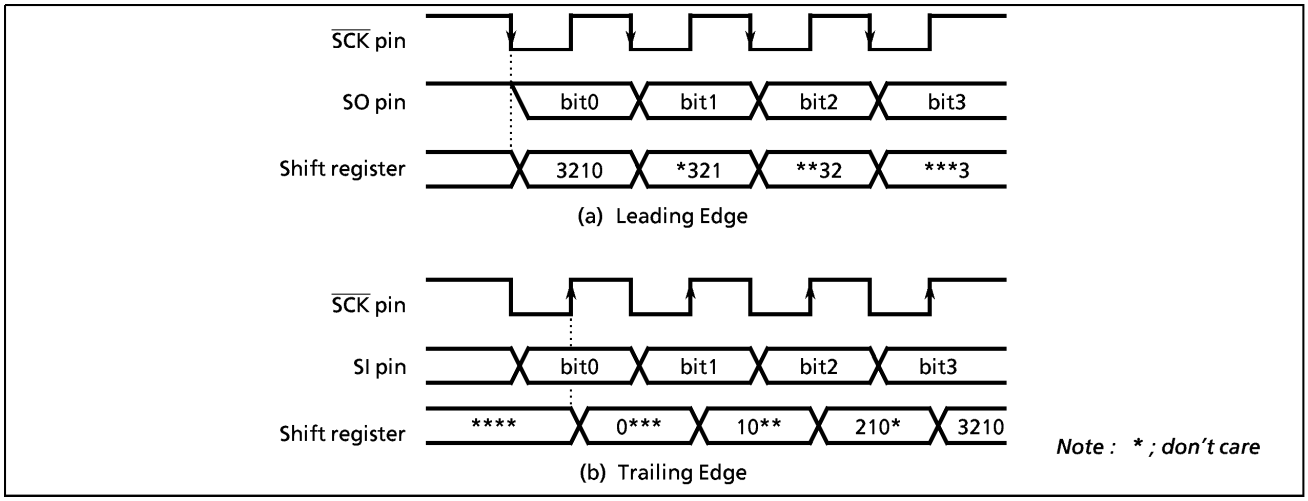

Figure 2-32. Shift Edge

(2) Number of Bits to Transfer

Either 4-bit or 8-bit serial transfer can be selected. When 4-bit serial transfer is selected, only the lower 4 bits of the transmit/receive data buffer register are used. The upper 4 bits are cleared to "0" when receiving.

The data is transferred in sequence starting at the least significant bit (LSB).

(3) Number of Words to Transfer

Up to 8 words consisting of 4 bits of data (4-bit serial transfer) or 8 bits (8-bit serial transfer) of data can be transferred continuously. The number of words to be transferred is loaded to BUF in SIOCR2. An INTSIO interrupt is generated when the specified number of words has been transferred. If the number of words is to be changed during transfer, the serial interface must be stopped before making the change.

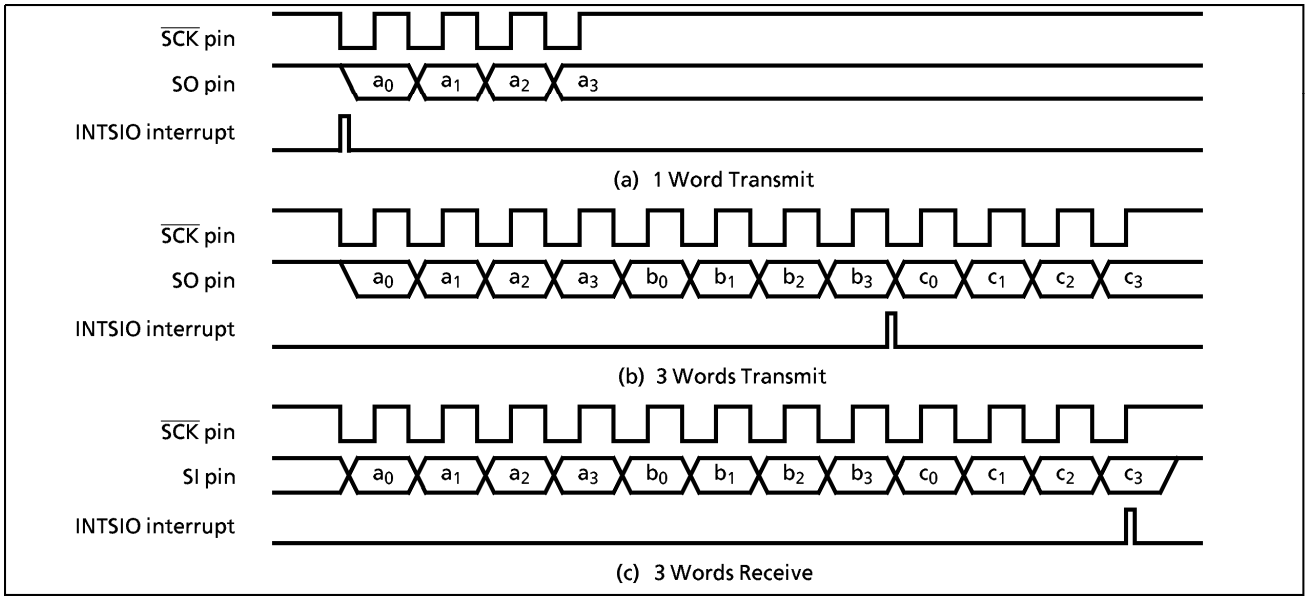

Figure 2-33. Number of Bits to Transfer (Example : 4-bit serial transfer)

2.9.3 Transfer Mode

SIOM (bits 5 - 3 in SIOCR1) and ERM (bit 5 in SIOCR2) are used to select the transmit, receive, or transmit/receive mode.

(1) **4-bit and 8-bit Transmit** Modes

In these modes, SIOCR1 and SIOCR2 are set to the transmit mode and then the data to be transmitted first are written to the data buffer registers (DBR). After the data are written, the transmission is started by setting SIOS to "1". The data are then output sequentially to the SO pin in synchronous with the serial clock, starting with the least significant bit (LSB). As soon as the LSB has been output, the data are transferred from the data buffer register to the shift register. When the final data bit has been transferred and the data buffer register is empty, an INTSIO (buffer empty) interrupt is generated to request the next transmitted data.

When the internal clock is used, the serial clock will stop and an automatic-wait will be initiated if the next transmitted data are not loaded to the data buffer register by the time the number of data words specified with BUF has been transmitted. Writing even one word of data cancels the automatic-wait; therefore, when transmitting two or more words, always write the next word before transmission of the previous word is completed.

Note : The wait is also canceled by writing to a DBR not being used as a transmit data buffer register; therefore, during SIO do not use such DBR for other applications.

When an external clock is used, the data must be written to the data buffer register before shifting next data. Thus, the transfer speed is determined by the maximum delay time from the generation of the interrupt request to writing of the data to the data buffer register by the interrupt service program.

When the transmit is started, after the SIOF goes "1" output from the SO pin holds final bit of the last data until falling edge of the $\overline{SCK}$.

The transmission is ended by clearing SIOS to "0" or setting SIOINH to "1" in buffer empty interrupt service program. That the transmission has ended can be determined from the status of SIOF (bit 7 in SIOSR) because SIOF is cleared to "0" when a transfer is completed.

When an external clock is used, it is also necessary to clear SIOS to "0" before shifting the next data; otherwise, dummy data will be transmitted and the operation will end.

When SIOINH is set, the transmission is immediately ended and SIOF is cleared to "0".

If it is necessary to change the number of words, SIOS should be cleared to "0", then BUF must be rewritten after confirming that SIOF has been cleared to "0".

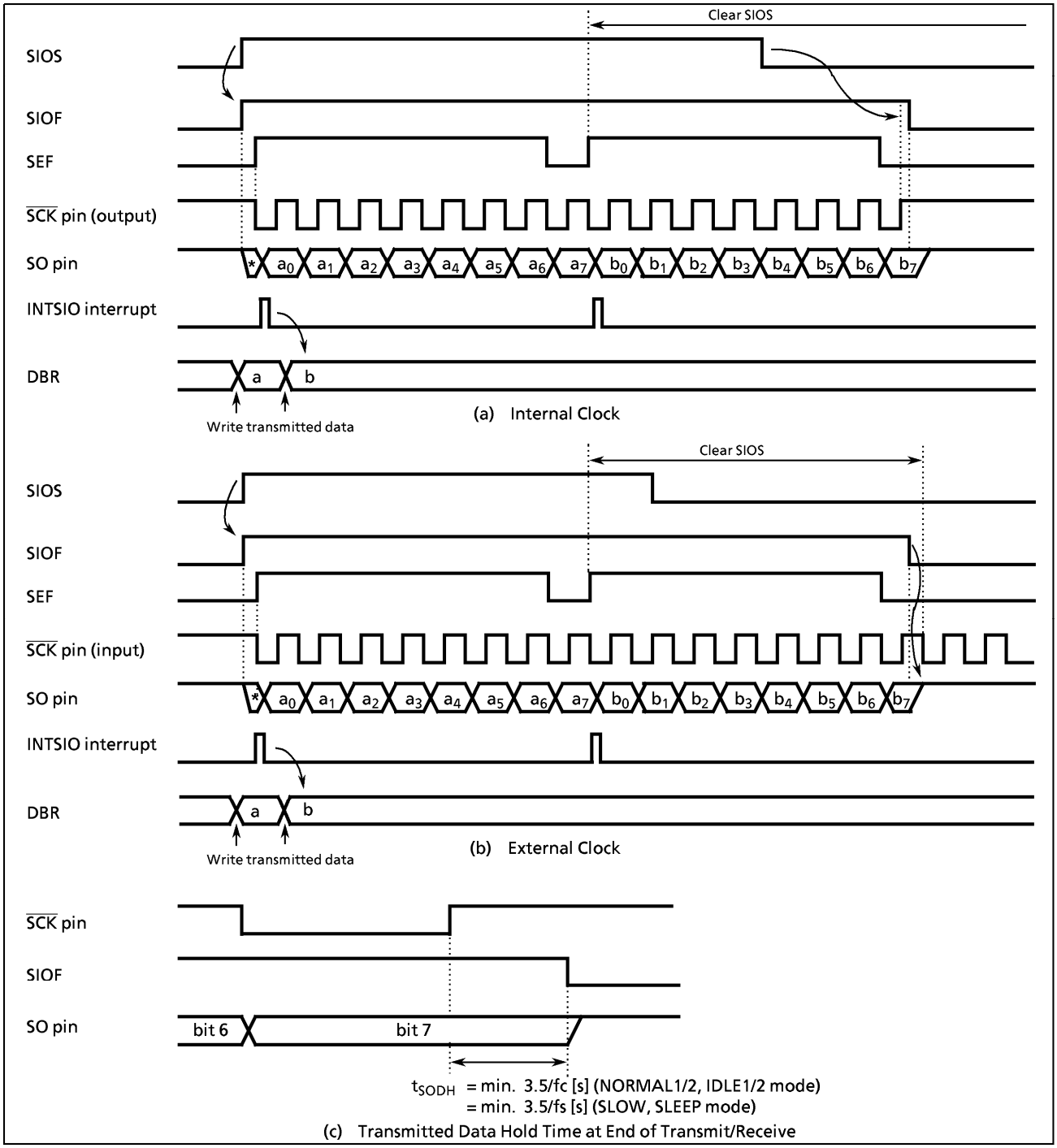

Figure 2-34. Transmit Mode (Example : 8 bit, 1 Word Transmit)

Example : The way of the transfer stopped (8-bit Transmit mode, External clock).

```
STEST1 :   TEST   (SIOCR1).SEF        ; If SEF = 1 then loop
           JRS    F,STEST1
STEST2 :   TEST   (P3).2              ; If SCK = 0 then loop
           JRS    T,STEST2
           LD     (SIOCR1),00100111B  ; SIOS←0
```

When to clear SIOS to "0", that it is also necessary to check SEF = 0 and $\overline{SCK}$ = 1.

(2) **4-bit and 8-bit Receive** Modes

After setting the control registers to the receive mode, set SIOS to "1" to enable receiving. The data is then transferred to the shift register via the SI pin synchronous with the serial clock. When one word of data has been received, it is transferred from the shift register to the data buffer register (DBR). When the number of words specified with BUF has been received, an INTSIO (buffer full) interrupt is generated to request that these data be read out. The data are then read from the data buffer registers by the interrupt service program.

When the internal clock is used, and the previous data are not read from the data buffer register before the next data are received, the serial clock will stop and an automatic-wait will be initiated until the data are read. A wait will not be initiated if even one data word has been read.

Note :	*The wait is also canceled by reading a DBR not being used as a received data buffer register is read; therefore, during SIO do not use such DBR for other applications.*

When an external clock is used, the shift operation is synchronized with the external clock; therefore, the previous data are read before the next data are transferred to the data buffer register. If the previous data have not been read, the next data will not be transferred to the data buffer register and the receiving of any more data will be canceled. When an external clock is used, the maximum transfer speed is determined by the delay between the time when the interrupt request is generated and when the data received have been read.

The receiving is ended by clearing SIOS to "0" or setting SIOINH to "1" in buffer full interrupt service program. When SIOINH is set, the receiving is immediately ended and SIOF is cleared to "0". When SIOS is cleared, the current data are transferred to the buffer in 4-bit or 8-bit blocks. The receiving mode ends when the transfer is completed. SIOF is cleared to "0" when receiving is ended and thus can be sensed by program to confirm that receiving has ended.

If it is necessary to change the number of words in external clock operation, SIOS should be cleared to "0" then BUF must be rewritten after confirming that SIOF has been cleared to "0".

If it is necessary to change the number of words in internal clock, during automatic-wait operation which occurs after completion of data receive, BUF must be rewritten before the received data is read out.

Note :	*The buffer contents are lost when the transfer mode is switched. If it should become necessary to switch the transfer mode, end receiving by clearing SIOS to "0", read the last data and then switch the transfer mode.*

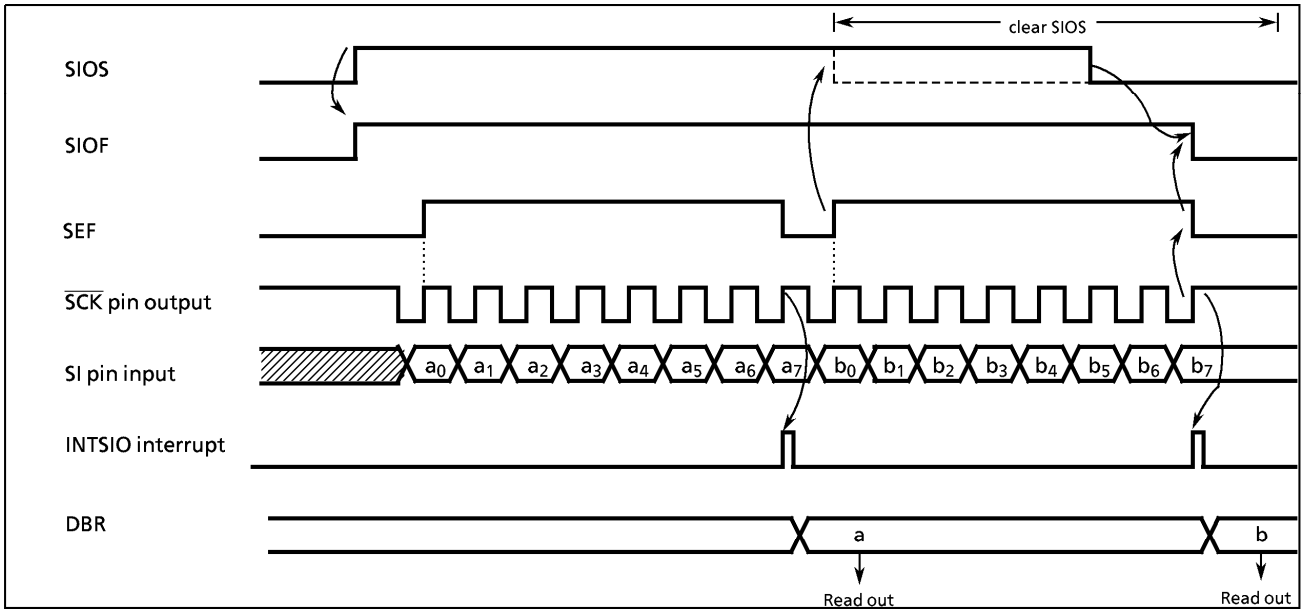

Figure 2-35. Receive Mode (Example : 8-bit, 1 Word, Internal Clock)

(3) **8-bit Transmit/Receive** Mode

After setting the control registers to the 8-bit transmit/receive mode, write the data to be transmitted first to the data buffer registers (DBR). After that, enable transceiving by setting SIOS to "1". When transmitting, the data are output from the SO pin at leading edges of the serial clock. When receiving, the data are input to the SI pin at the trailing edges of the serial clock. 8-bit data are transferred from the shift register to the data buffer register. An INTSIO interrupt is generated when the number of data words specified with BUF has been transferred. The interrupt service program reads the received data from the data buffer register and then writes the data to be transmitted. The data buffer register is used for both transmitting and receiving; therefore, always write the data to be transmitted after reading the received data.

When the internal clock is used, a wait is initiated until the received data is read and the next data is written. A wait will not be initiated if even one data word has been written.

Note : The wait is also canceld by reading a DBR not being used as a received data buffer register is read ; therefore, during SIO do not use such DBR for other applications.

When an external clock is used, the shift operation is synchronized with the external clock; therefore, it is necessary to read the received data and write the data to be transmitted next before starting the next shift operation. When an external clock is used, the transfer speed is determined by the maximum delay between generation of an interrupt request and the received data are read and the data to be transmitted next are written.

When the transmit is started, after the SIOF goes "1" output from the SO pin holds final bit of the last data until falling edge of the $\overline{SCK}$.

The transmit / receive operation is ended by clearing SIOS to "0" or setting SIOINH to "1" in interrupt service program. When SIOS is cleared, the current data are transferred to the data buffer register in 8-bit blocks. The transmit mode ends when the transfer is completed. SIOF is cleared to "0" when receiving is ended and thus can be sensed by program to confirm that receiving has ended.

When SIOINH is set, the transmit / receive operation is immediately ended and SIOF is cleared to "0".

If it is necessary to change the number of words in external clock operation, SIOS should be cleared to "0", then BUF must be rewritten after confirming that SIOF has been cleared to "0".

If it is necessary to change the number of words in internal clock, during automatic-wait operation which occurs after completion of transmit / receive operation, BUF must be rewritten before reading and writing of the receive / transmit data.

Note : The buffer contents are lost when the transfer mode is switched. If it should become necessary to switch the transfer mode, end receiving by clearing SIOS to "0", read the last data and then switch the transfer mode.

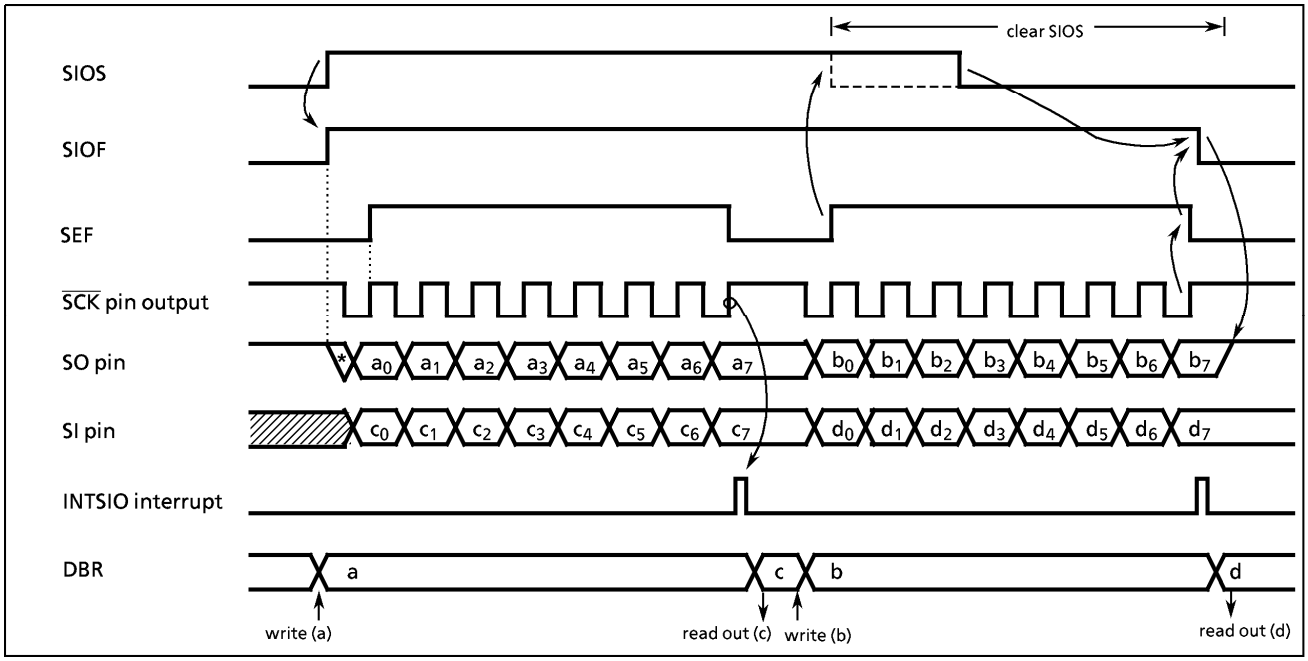

Figure 2-36. Transmit/Receive Mode (Example : 8-bit, 1Word, Internal Clock)

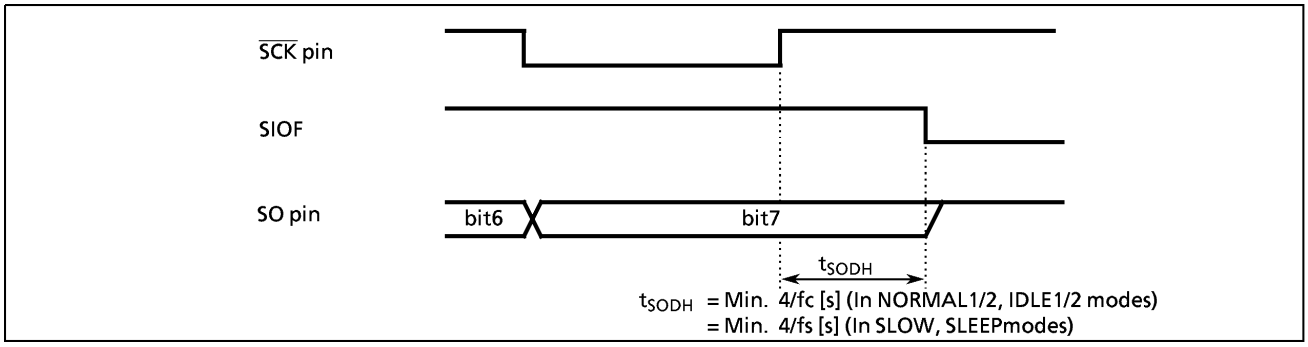

Figure 2-37. Transmitted Data Hold Time at End of Transmit/Receive

2.10 8-bit High-speed Serial Output (HSO)

The 87CM71/N71/P71/S71 each have a clock-synchronous 8-bit serial output (HSO). The HSO has a 1-byte transmit data buffer register (HSODR). The HSODR is assigned to address $0FF8_H$ in the DBR area. The HSO is connected to the external devices via pins P35 ($\overline{HSCK}$) and P37 (HSO). These pins are also used as the port P3. When used as pins $\overline{HSCK}$/HSO, the P35/P37 output latches should be set to "1".

2.10.1 Configuration

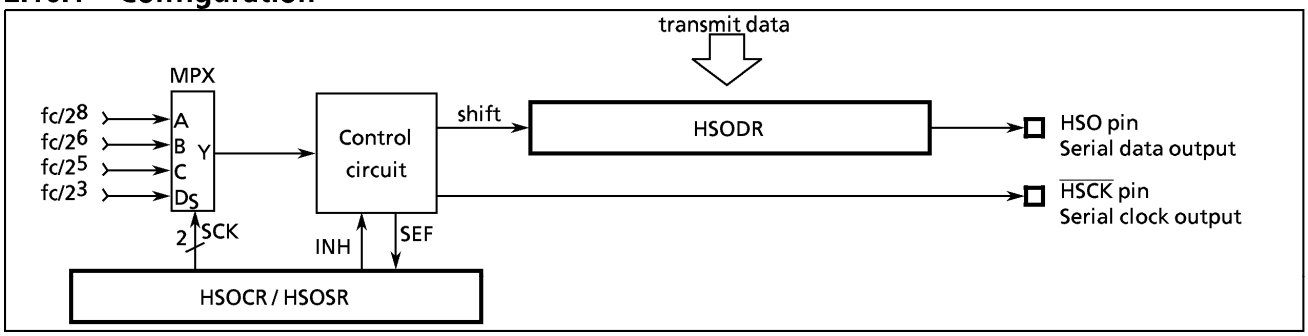

Figure 2-38. High-speed Serial Output

2.10.2 Control

The HSO is controlled by a HSO control register (HSOCR). The transfer status can be determined by reading a HSO status register (HSOSR).

HSO Control Register

HSOCR (0024_H)

7	6	5	4	3	2	1	0
	INH					SCK	

(Initial value : *0** **00)

INH	Transmit control	0 : Continue transfer 1 : Abort transfer	write only
SCK	Serial clock select	00 : Internal clock fc / 2^8 [Hz] 01 : Internal clock fc / 2^6 10 : Internal clock fc / 2^5 11 : Internal clock fc / 2^3	

*Note : fc ; High-frequency clock [Hz], * ; don't care*

HSO Status Register

HSOSR (0024_H)

7	6	5	4	3	2	1	0
"1"	SEF	"1"	"1"	"1"	"1"	"1"	"1"

SEF	Shift operating status monitor	0 : Shift operation terminated (enable write to buffer) 1 : Shift operation in process (disable write to buffer)	read only

Figure 2-39. HSO Control Register and Status Register

2.10.3 Transmit Operations

SCK (bits 1 and 0 in HSOCR) is used to select the transfer rate. Transmission is started by writing one byte of data to the HSODR. The transmit data are output sequentially to the HSO pin in synchronized with the falling edges of the serial clock, starting with the least significant bit (LSB). Writing to the buffer is disabled by the hardware during data transfers. The shift register is empty after one byte of data has been transferred, so writing to the buffer is again enabled at that point. SEF (bit 6 in HSOSR) is set to "1" during transfers (write to buffer disabled) and is cleared to "0" when a transfer is completed (write to buffer enabled); therefore, whether or not a transfer has been completed can be confirmed with a program that reads SEF. The $\overline{HSCK}$ pin is raised to "high" at the start and end of transfers.

Note : To continue a transfer without sensing SEF, write the next data to be transferred after 9 cycles (11 cycles when fc/2³ [Hz] is selected only) at the transfer rate selected with SCK after writing to the buffer.

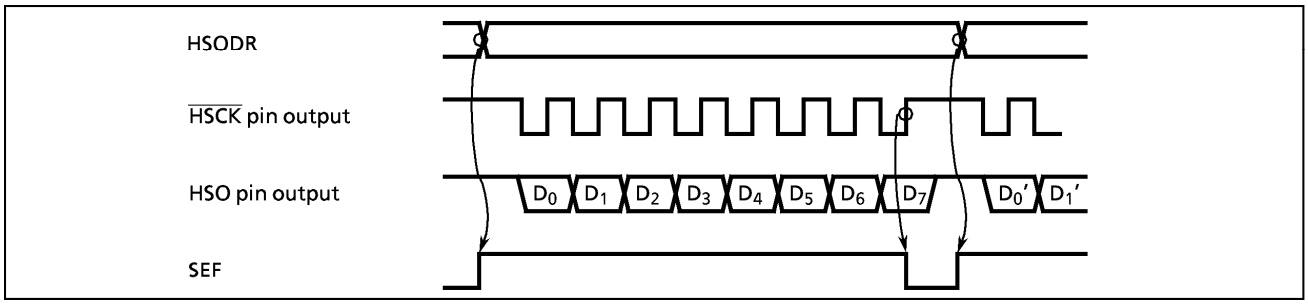

Figure 2-40. High-speed Serial Output Timing Chart

2.11 6-bit A/D Conversion (Comparator) Inputs

The comparator input is an analog input to discriminate key input or AFC (Auto Frequency Control) signal input, etc. The analog input voltage level (pins CIN5 - CIN0) can be detected as 64-stage by setting reference voltage.

The comparator input pins CIN5-CIN0 can also be used as ports P46, P47 and P53 - P50.

When used as a comparator input, the output latch should be set to "1". Note that the built-in pull-down resistances of the pins P47 and P46 must be cut off by clearing EPD (bits 7 and 6 in P4CR) to "0" when used as pins CIN4 and CIN5.

2.11.1 Configuration

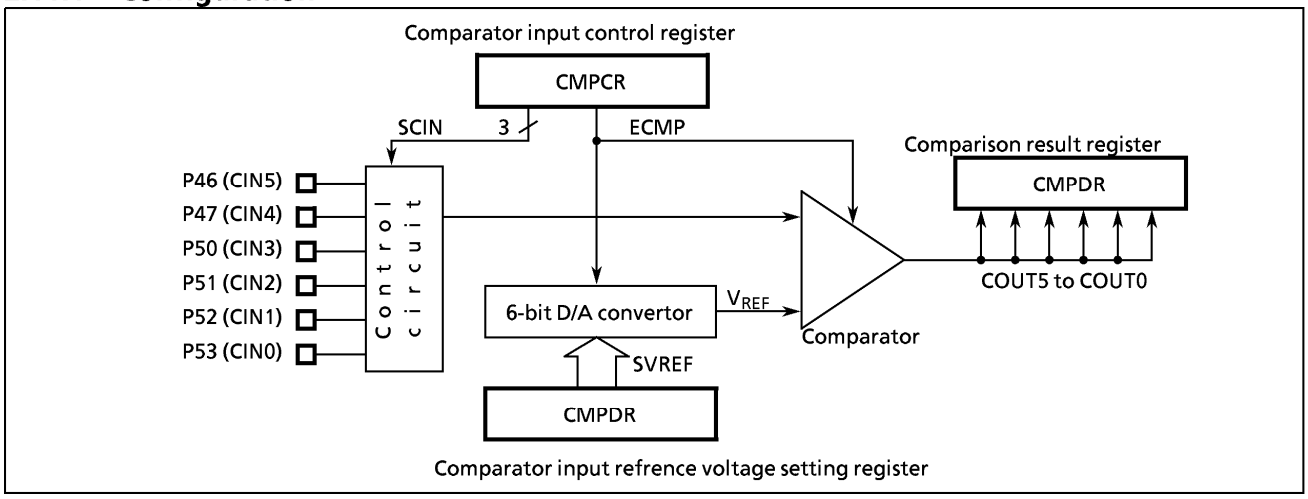

Figure 2-41. 6-bit A/D Conversion (Comparator) Input

2.11.2 Control

A/D conversion (comparator) inputs are controlled by a comparator input control register (CMPCR) and a comparator input data register (CMPDR). The CMPDR contains a reference voltage setting register (write-only) and a comparison result register (read-only).

Comparator Input Control Register

CMPCR ($000E_H$)

7	6	5	4	3	2	1	0
ECMP					SCIN		

(Initial value : 0*** *000)

ECMP	Comparator input control	0 : Disable Comparator input 1 : Enable Comparator input	write only
SCIN	Number of Comparator input channels select	000 : 1 channel (CIN0) 001 : 2 channels (CIN0 to 1) 010 : 3 channels (CIN0 to 2) 011 : 4 channels (CIN0 to 3) 100 : 5 channels (CIN0 to 4) 101 : 6 channels (CIN0 to 5) 11* : Reserved	

Note1 : The CMPCR is a write-only register and must not be used with any of the read-modify-write instructions.
Note2 : Do not set the ECMP to "1" in the SLOW mode.

Comparator Input Data Register

CMPDR ($000F_H$)

7	6	5	4	3	2	1	0
		SVREF					
"1"	"1"	COUT5	COUT4	COUT3	COUT2	COUT1	COUT0

(Initial value : **00 0000)

SVREF	Reference voltage (V_{REF}) setting	$V_{REF} = V_{DD} \times (SVREF + 1) / 64$ [V] (SVREF = 0 to 63)	write only
COUT5 to COUT0	Comparison result	Result of comparing the CIN5 - CIN0 pin analog input voltage with the reference voltage.	read only

*Note : * ; don't care*

Figure 2-42. Comparator Input Control Register and Data Register

2.11.3 Function

Reference voltage (V_{REF}) is set with SVREF (bits 5 - 0 in CMPDR).
The number of comparator input channels is selected with SCIN (bits 2 - 0 in CMPCR). Sequential comparison of the selected number of channels is started by setting ECMP (bit 7 in CMPCR) to "1".
The comparison of one channel requires two machine cycles; therefore, the comparison result register (COUT5 - COUT0) should be read out at an interval equal to [number of channels × 2 machine cycles] after setting the reference voltage (V_{REF}). COUT5 - COUT0 are set to "1" if the input voltage (pins CIN5 - CIN0) is higher than the reference voltage (V_{REF}) ; otherwise those are cleared to "0".

Note 1 : When entering STOP and SLOW modes, ECMP is automatically cleared and SCIN/SVREF are held. And, COUT5 - COUT0 are always set to "1".

Note 2 : Any pins specified for comparator input with SCIN can no longer be used for normal digital input or key scan input, and are read out as"0".

Note 3 : COUT5 - COUT0 are read out as "1" when not used as a comparator input. For example, bits 7 to 3 in CMPDR are always read out as "1" when SCIN = 010_B.

Example : Comparates the CIN3-CIN0 inputs with V_{REF} = 2.5 V (At V_{DD} = 5 V).

```
LD      (P5), 11111111B          ; Sets port P5 output latches to "1".
LD      (CMPDR), 00011111B       ; Sets VREF = 2.5 V
LD      (CMPCR), 10000011B       ; Sets SCIN to 4 channels and Enables comparator input

                                 ; 4ch x 2 machine cycles -2
                                   = 6 machine cycles wait.

LD      A, (CMPDR)               ; Reads CMPDR (COUT0 to COUT3).
```

Table 2-9. Reference Voltage (at V_{DD} = 5V)

SVREF						V_{REF} [V]
5	4	3	2	1	0	
0	0	0	0	0	0	0.078
0	0	0	0	0	1	0.156
0	0	0	0	1	0	0.234
⋮						⋮
1	1	1	1	0	1	4.844
1	1	1	1	1	0	4.922
1	1	1	1	1	1	5.000

2.12 Vacuum Fluorescent Tube Driver Circuit

The 87CM71/N71/P71/S71 each have 32 high-breakdown voltage output buffers that directly drive the Vacuum Fluorescent Tube (VFT) and its control circuit.

2.12.1 Configuration

Figure 2-43 shows the VFT driver circuitry configuration.

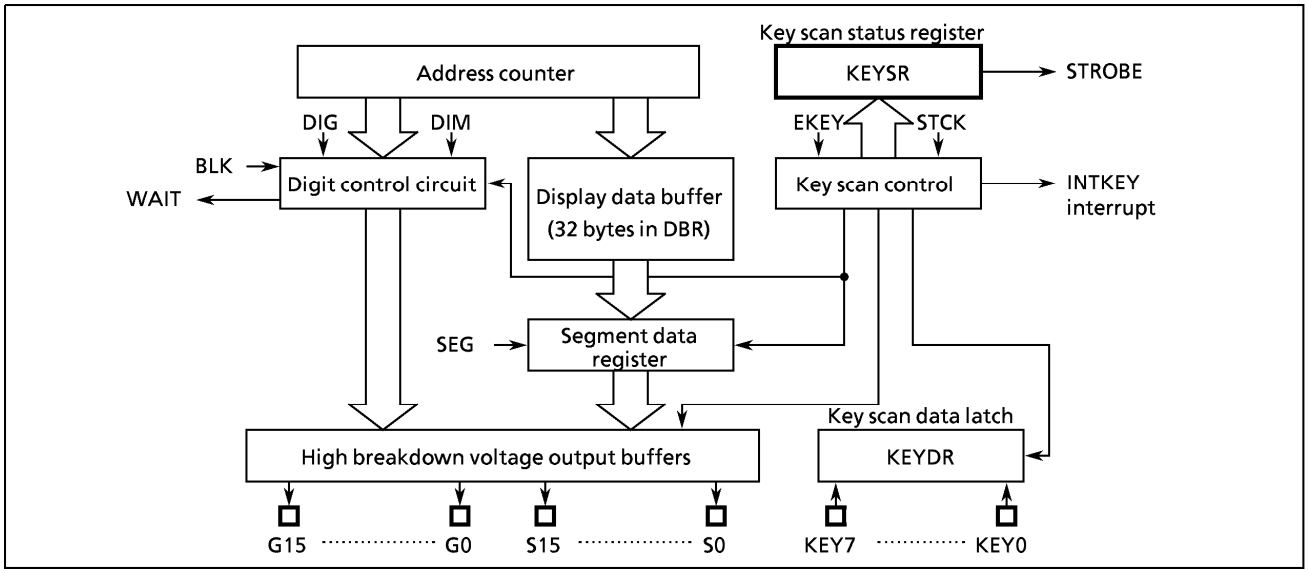

Figure 2-43. VFT Driver Circuitry

2.12.2 Function

① 32 high-breakdown voltage output buffers.
- 16 digit output buffers (G0 to G15)
- 16 segment output buffers (S0 to S15)

The VKK pin is provided for the VFT drive power supply.

② 8 - 16 segments × 1 - 16 digits can be selected by program using the dynamic display.
③ Pins not used for the VFT driver can be used as general-purpose ports.
④ The display data is automatically transferred to the high-breakdown voltage output buffers from the display data buffer memory (32 bytes in the DBR).
⑤ Brightness level adjustment (8 levels) is available with a dimmer function.
⑥ An automatic key scan function is available. It is possible to use the segment outputs for key strobe outputs.

2.12.3 Control

The VFT driver circuit is controlled by two VFT control registers (VFTCR1 and VFTCR2). The VFT operational status can be determined by reading a VFT status register (VFTSR).
Switching from NORMAL 1 or NORMAL 2 mode to SLOW or STOP mode, BLK is set to "1" and EKEY is cleared to "0" ; therefore, the VFT driver circuit is placed into the blanking state. The contents of the VFT control registers (except BLK, EKEY) are held. Also segment outputs and digit outputs are cleared to "0"; therefore, the ports P6, P7, P8 and P9 function as normal I/O ports with pull-down.

VFT Control Register 1

VFTCR1 (0028_H)

7	6	5	4	3	2	1	0
BLK	EKEY	STCK		SEG			

(Initial value : 1000 0111)

BLK	VFT display control	0 : Enable 1 : Disable (blanking)	write only
EKEY	Key scan function control	0 : Disable 1 : Enable	
STCK	Key scan strobe source clock select	00 : $fc/2^{12}$ or $fs/2^5$ [Hz] (once every 4 t_{SEG}) 01 : $fc/2^{13}$ or $fs/2^6$ (once every 8 t_{SEG}) 10 : $fc/2^{14}$ or $fs/2^7$ (once every 16 t_{SEG}) 11 : $fc/2^{15}$ or $fs/2^8$ (once every 32 t_{SEG})	
SEG	Number of segments select	0111 : 8-segment display mode (outputs S0 to S7) 1000 : 9-segment display mode (outputs S0 to S8) 1001 : 10-segment display mode (outputs S0 to S9) 1010 : 11-segment display mode (outputs S0 to S10) 1011 : 12-segment display mode (outputs S0 to S11) 1100 : 13-segment display mode (outputs S0 to S12) 1101 : 14-segment display mode (outputs S0 to S13) 1110 : 15-segment display mode (outputs S0 to S14) 1111 : 16-segment display mode (outputs S0 to S15) 0**0 : Reserved 0*0* : Reserved 00** : Reserved	

Figure 2-44 (a). VFT Control Registers

Note 1 : fc ;High-frequency clock [Hz],
fs ; Low -frequency clock [Hz],
Note 2 : VFTCR1 is write-only register, which cannot access any of in read-modify-write instruction such as bit operate, etc.

VFT Control Register 2

VFTCR2 (0029_H)

7	6	5	4	3	2	1	0
	DIM			DIG			

(Initial value : *000 0000)

DIM	Dimmer time select	000 : (14/16) × t_{SEG} [s] 001 : (12/16) × t_{SEG} 010 : (10/16) × t_{SEG} 011 : (8/16) × t_{SEG} 100 : (6/16) × t_{SEG} 101 : (4/16) × t_{SEG} 110 : (2/16) × t_{SEG} 111 : (1/16) × t_{SEG}	write only
DIG	Number of digits select	0000 : 1-digit display mode (outputs G0) 0001 : 2-digit display mode (outputs G0 to G1) 0010 : 3-digit display mode (outputs G0 to G2) 0011 : 4-digit display mode (outputs G0 to G3) 0100 : 5-digit display mode (outputs G0 to G4) 0101 : 6-digit display mode (outputs G0 to G5) 0110 : 7-digit display mode (outputs G0 to G6) 0111 : 8-digit display mode (outputs G0 to G7) 1000 : 9-digit display mode (outputs G0 to G8) 1001 : 10-digit display mode (outputs G0 to G9) 1010 : 11-digit display mode (outputs G0 to G10) 1011 : 12-digit display mode (outputs G0 to G11) 1100 : 13-digit display mode (outputs G0 to G12) 1101 : 14-digit display mode (outputs G0 to G13) 1110 : 15-digit display mode (outputs G0 to G14) 1111 : 16 -digit display mode(outputs G0 to G15)	

Note: t_{SEG} ; During NORMAL 1 or NORMAL 2 (DV7CK = 0) ..... 2^{10} / fc [s]
During NORMAL 2 mode (DV7CK = 1) ..... 2^3 / fs

VFT Status Register

VFTSR (0029_H)

7	6	5	4	3	2	1	0
WAIT	"1"	"1"	"1"	"1"	"1"	"1"	"1"

WAIT	VFT display operational status monitor	0 : VFT display in operation 1 : VFT display operation disabled (or key scan operation)	read only

Key Scan Status Register

KEYSR ($002A_H$)

7	6	5	4	3	2	1	0
"1"	"1"	"1"	"1"		STROBE		

STROBE	key strobe position monitor	Sn (n = STROBE = 0 to 15)	read only

Figure 2-44 (b). VFT Control Registers/Status Registers

(1) Display Mode Setting

The number of segments is selected with SEG (bits 3-0 in VFTCR1) and the number of digits is selected with DIG (bits 3-0 in VFTCR2) when BLK (bit 7 in VFTCR1) = 1 and EKEY (bit 6 in VFTCR1) = 0. The dimmer time (digit output time) is selected with DIM (bits 6-4 in VFTCR2).

Example : Sets display mode (8-seg. × 16-dig., (14/16) × t_{SEG})

```
LDW    (VFTCR1), 0F87H    ;    BLK←1, EKEY←0, STCK←00, SEG←0111, DIM←000, DIG←1111
```

(2) Display Data Setting

Normally, the conversion of data to VFT display data is performed by instructions. The converted data which stored to the display data buffer memory (addresses $0F80_H$ - $0F9F_H$ in the DBR) is

automatically transferred to the VFT driver circuit and output to the high-breakdown voltage output buffers. Thus, display patterns can be varied by merely changing the data in the data buffer memory.

The VFT segments (dots) and display data area bits have a one-to-one correspondence. A "1" bit lights the corresponding segment and a "0" bit turns off the corresponding segment. Areas of the display data buffer not used for display purposes can be used as normal data memory. The display data buffer is assigned to the DBR area shown in Figure 2-45 (a) but, in the 8-segment display mode only, the assignment is as shown in Figure 2-45 (b) for more effective utilization of data memory.

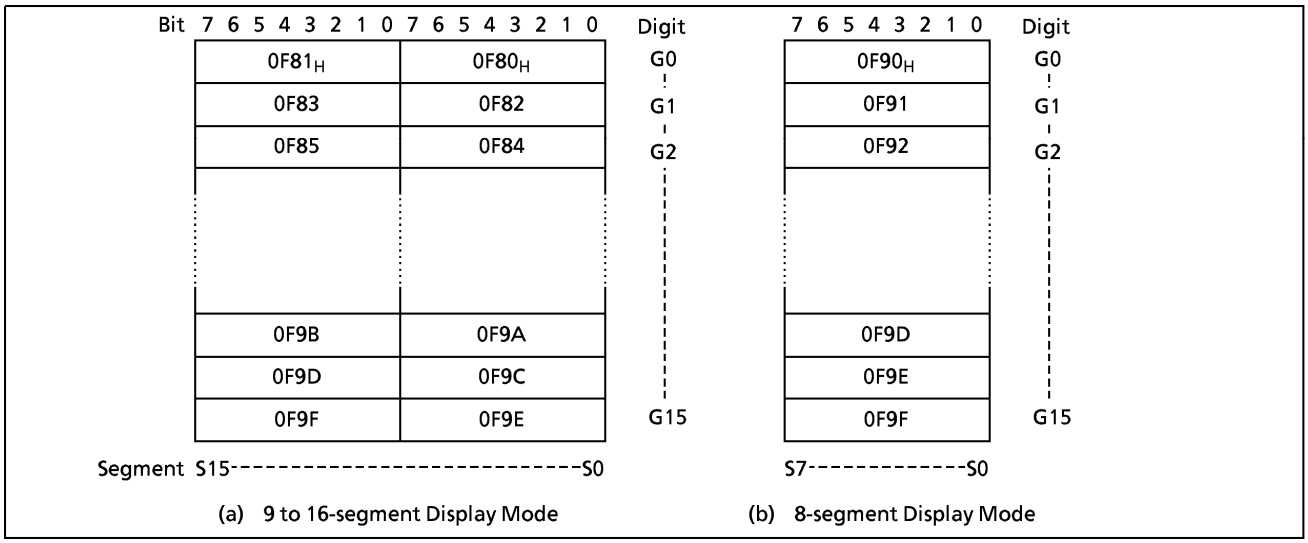

Figure 2-45. VFT Display Data Buffer Memory (DBR)

2.12.4 Display Operation

After setting the display mode and storing the display data, VFT display is started by clearing BLK to "0". Figure 2-46 shows the VFT drive waveform.

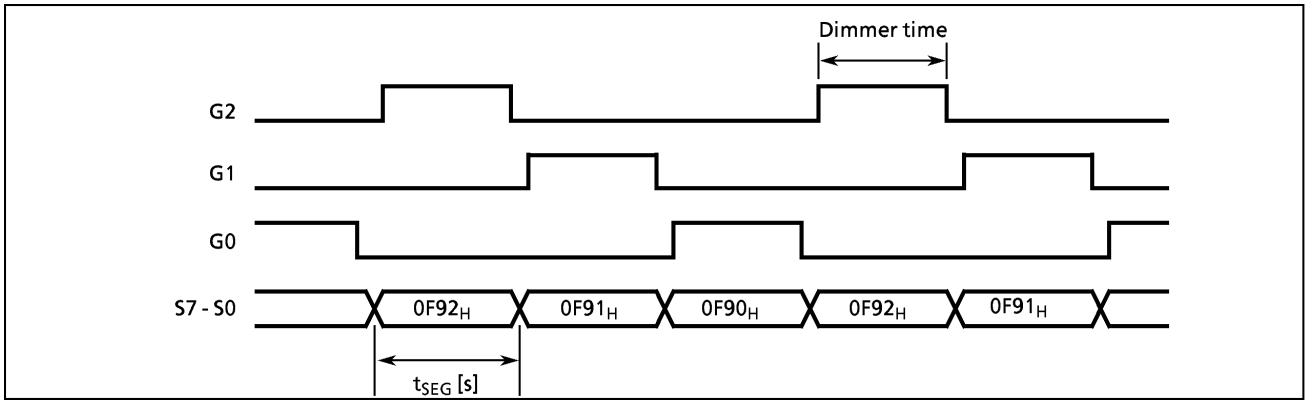

Figure 2-46. VFT Drive Waveform (Example : 8-segment × 3-digit Display)

2.12.5 Key Scan Function

The key strobe signal can be output automatically.

The output latch should be set to "1" to use the port P4 (KEY) for key scan input.

Setting EKEY (bit 6 in VFTCR1) to "1", the key scan timing is inserted into the display operation synchronizes with the scan rate selected with STCK. A key strobe pulse is output at the key scan timing from the pin Sn (one of the scan segment output pins selected with SEG). The segment pin number "n" is decremented at each key scan timing. For example, in the 8-segment display mode, the output would be from the S7→S6→ ···→ S0→S7 pins.

The KEY7 - KEY0 pin input data synchronized with the key strobe output are latched to the key scan input latches (KEYDR) ; therefore, key scan can be performed by configuring a key matrix with the segment output pins and KEY 7 - KEY0 pins.
The key scan interrupt request (INTKEY) is generated in synchronized with key data latching; therefore, the key strobe bit can be identified by sensing the key scan status register ($002A_H$) with an interrupt service routine and reading the stored key data (return code) from the key scan input latches (KEYDR).
The following key scan timing is canceled until KEYDR has been read out.

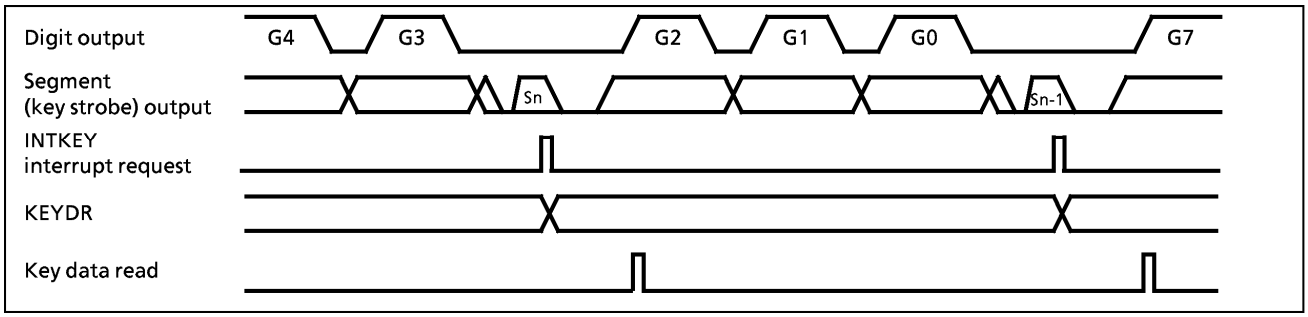

Figure 2-47. Key Scan Timing (8-digit Display)

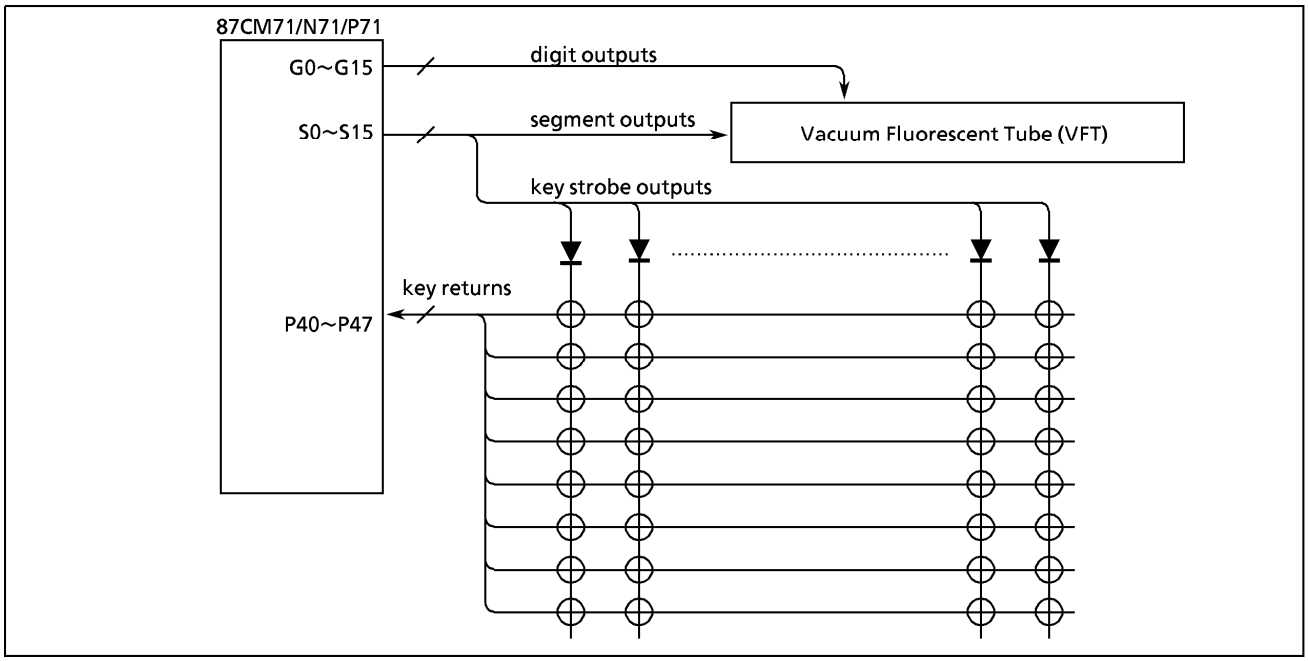

Figure 2-48. Key Matrix Example

2.12.6 Port Function

(1) High-Breakdown Voltage Buffer

When a VFT is being driven, the output latch is cleared to "0". The port output latch is initialized to "0" during reset).

When using as a normal input/output pin, caution is required because of being pulled down to the VKK pin voltage internally.

a. Output

The pins are brought to the VKK pin voltage by the built-in pull-down resistor for "low" level output;consequently, as shown in Figure 2-49, diode grounding is necessary to prevent the VKK pin voltage being applied to the external circuitry.

b. Input

The port output latch should be cleared to "0" when inputting external data.
The input threshold level is same as for the other normal I/O port but, because of being pulled down to the VKK pin voltage, R_K (typ. 80 kΩ) must be fully driven.

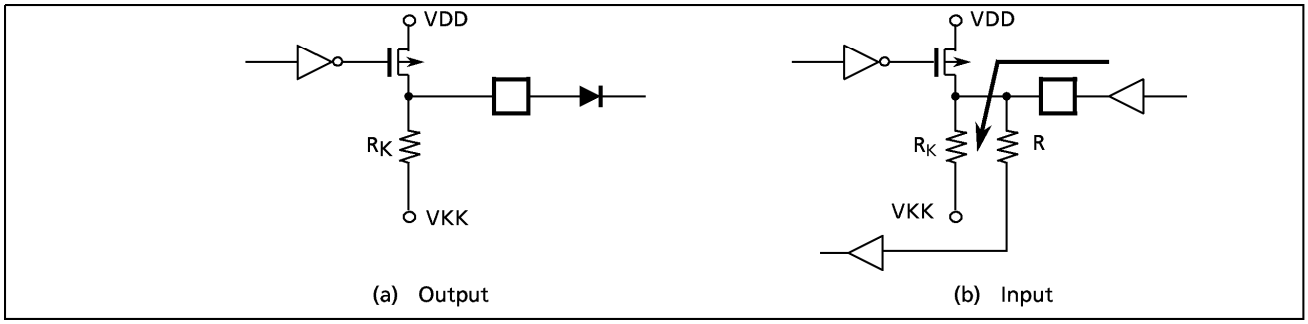

Figure 2-49. External Circuit Interface

(2) Key Scan Input Pins

The pins P47 (KEY7) to P40 (KEY0) are controlled by turning on and off the built-in pull-down resistance for each bit with a P4 port control register (P4CR).

Note 1 : The key scan input latch (address 0004_H) is only effective when EKEY in VFTCR1 is set to "1". The initial value is "0".

Note 2 : When EKEY is set to "1", used for key scan input and cannot be used for normal input or bit operations.

P4CR ($000C_H$)

7	6	5	4	3	2	1	0
EPD							

(Initial value : 0000 0000)

EPD	Port P4 pull-down control	0 : Disconnect pull-down resistance 1: Connect pull-down resistance	Write only

Figure 2-50. Port P4 Control Register

INPUT/OUTPUT CIRCUITRY

The instruction for specifying Masking Option (I/O code) in ES Order Sheet is described in ADDITIONAL INFORMATION "Notice for Masking Option of TLCS-870 series" section 8.

(1) Control pins

The input/output circuitries of the 87CM71/N71/P71/S71 control pins are shown below.

Please specify either the single-clock mode (oscillation only XIN/XOUT) or the dual-clock mode (oscillation both XIN/XOUT and XTIN/XTOUT) by a code (NM1 or NM2) as an option for an operating mode during reset.

CONTROL PIN	I/O	INPUT/OUTPUT CIRCUITRY and code	REMARKS
XIN XOUT	Input Output	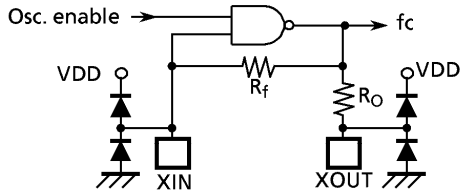	Resonator connecting pins (high-frequency) R_f = 1.2 MΩ (typ.) R_O = 1.5 kΩ (typ.) R = 1 kΩ (typ.)
XTIN (P21) XTOUT (P22)	Input Output	NM1: Refer to port P2 NM2: 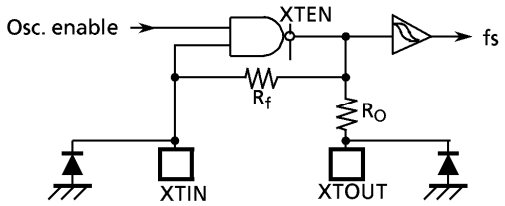	Resonator connecting pins (low-frequency) R_f = 6 MΩ (typ.) R_O = 220 kΩ (typ.) R = 1 kΩ (typ.)
$\overline{\text{RESET}}$	I/O	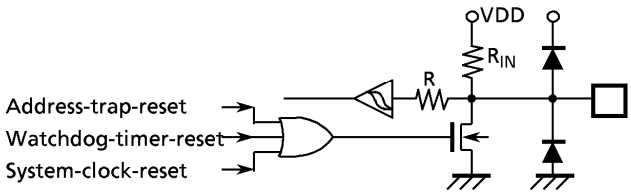	Sink open drain output Hysteresis input Pull-up resistor R_{IN} = 220 kΩ (typ.) R = 1 kΩ (typ.)
$\overline{\text{STOP}}$ / $\overline{\text{INT5}}$ (P20)	Input	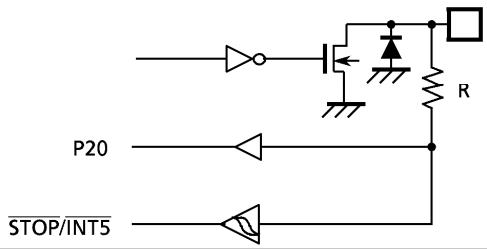	Hysteresis input R = 1 kΩ (typ.)
TEST	Input	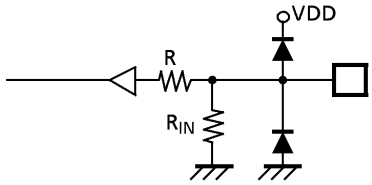	Pull-down resistor R_{IN} = 70 kΩ (typ.) R = 1 kΩ (typ.)

Note1 : The TEST pin of the 87PP71/PS71 does not have a pull-down resistor. Fix the TEST pin at low level in MCU mode.

Note2 : The 87PP71/PS71 are placed in the single-clock mode during reset, and the input/output circuitries are the code NM1 type.

(2) Input/Output Ports

The input/output circuitries of the 87CM71/N71/P71/S71 input / output ports are shown below.
A mask option code is only "A".

PORT	I/O	INPUT / OUTPUT CIRCUITRY (CODE A)	REMARKS
P0	I/O	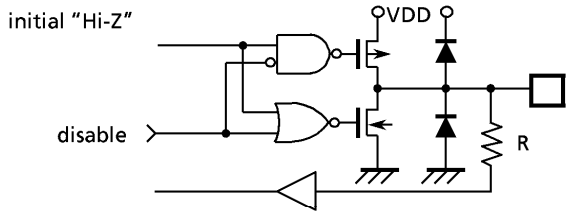	Tri-state I/O R = 1 kΩ (typ.)
P1	I/O	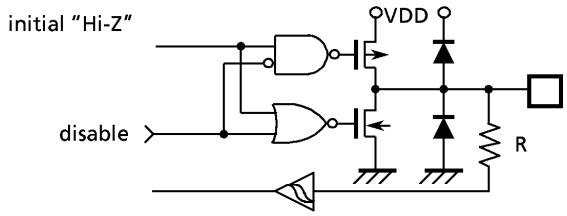	Tri-state I/O Hysteresis input R = 1 kΩ (typ.)
P2	I/O	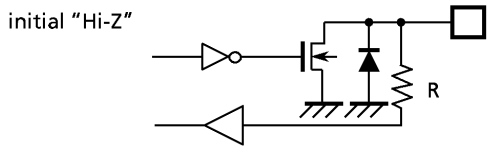	Sink open drain output R = 1 kΩ
P3	I/O	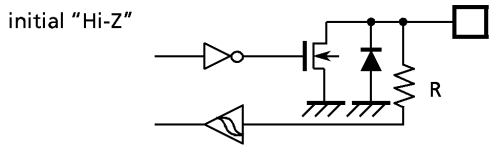	Sink open drain output Hysteresis input R = 1 kΩ (typ.)
P4	I/O	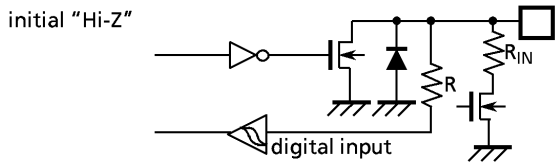	Sink open drain output Hysteresis input R_{IN} = 70 kΩ (typ.) R_{IN} is programable pull-down. R = 1 kΩ (typ.)
P5	I/O	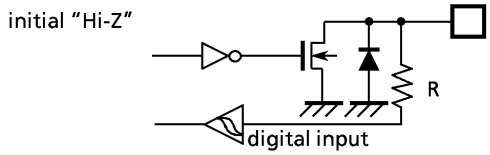	Sink open drain output R = 1 kΩ (typ.)

To be continued.

PORT	I/O	INPUT / OUTPUT CIRCUITRY (CODE A)	REMARKS
P6 P7 P9	I/O	initial "Hi-Z" VDD R_K VKK R R1	Source open drain output High-breakdown voltage R_K = 80 kΩ (typ.) R = 1 kΩ (typ.)
P8	Output	initial "Hi-Z" VDD R_K VKK	Source open drain output High-breakdown voltage R_K = 80 kΩ (typ.) R = 1 kΩ (typ.)

ELECTRICAL CHARACTERISTICS

ABSOLUTE MAXIMUM RATINGS (V_{SS} = 0 V)

PARAMETER	SYMBOL	CONDITIONS	RATINGS	UNIT
Supply Voltage	V_{DD}		– 0.3 to 6.5	V
Input Voltage	V_{IN}		– 0.3 to V_{DD} + 0.3	V
Output Voltage	V_{OUT1}	P2, P3, P4, P5, XOUT, $\overline{RESET}$	– 0.3 to V_{DD} + 0.3	V
	V_{OUT2}	Source open drain ports	V_{DD} – 40 to V_{DD} + 0.3	
Output Current (Per 1 pin)	I_{OUT1}	P0, P1, P2, P3, P4, P5	3.2	mA
	I_{OUT3}	P8, P9 (segment outputs)	– 12	
	I_{OUT4}	P6, P7 (digit outputs)	– 25	
Output Current (Total)	ΣI_{OUT1}	P0, P1, P2, P3, P4, P5	120	mA
	ΣI_{OUT2}	P6, P7, P8, P9	– 120	
Power Dissipation [Topr = 70°C]	PD		350	mW
Soldering Temperature (time)	Tsld		260 (10 s)	°C
Storage Temperature	Tstg		– 55 to 125	°C
Operating Temperature	Topr		– 30 to 70	°C

(1) 87CM71/N71/P71

RECOMMENDED OPERATING CONDITIONS (V_{SS} = 0 V, Topr = – 30 to 70 °C)

PARAMETER	SYMBOL	PINS	CONDITIONS		Min.	Max.	UNIT
Supply Voltage	V_{DD}		fc = 8 MHz	NORMAL1, 2 modes	4.5	5.5	V
				IDLE1, 2 modes			
			fc = 4.2 MHz	NORMAL1, 2 modes	2.7		
				IDLE1, 2 modes			
			fs = 32.768 kHz	SLOW mode			
				SLEEP mode			
				STOP mode	2.0		
Input High Voltage	V_{IH1}	Except hysteresis input	$V_{DD} \geqq 4.5V$		$V_{DD} \times 0.70$	V_{DD}	V
	V_{IH2}	Hysteresis input			$V_{DD} \times 0.75$		
	V_{IH3}		$V_{DD} < 4.5V$		$V_{DD} \times 0.90$		
Input Low Voltage	V_{IL1}	Except hysteresis input	$V_{DD} \geqq 4.5V$		0	$V_{DD} \times 0.30$	V
	V_{IL2}	Hysteresis input				$V_{DD} \times 0.25$	
	V_{IL3}		$V_{DD} < 4.5V$			$V_{DD} \times 0.10$	
Clock Frequency	fc	XIN, XOUT	VDD = 4.5 to 5.5V		0.4	8.0	MHz
			VDD = 2.7 to 5.5V			4.2	
	fs	XTIN, XTOUT			30.0	34.0	kHz

(2) 87CS71

RECOMMENDED OPERATING CONDITIONS (V_{SS} = 0 V, Topr = – 30 to 70 °C)

PARAMETER	SYMBOL	PINS	CONDITIONS		Min.	Max.	UNIT
Supply Voltage	V_{DD}		fc = 8 MHz	NORMAL1, 2 modes	4.5	5.5	V
				IDLE1, 2 modes			
			fs = 32.768 kHz	SLOW mode	2.7		
				SLEEP mode			
				STOP mode	2.0		
Input High Voltage	V_{IH1}	Except hysteresis input	$V_{DD} \geqq 4.5V$		$V_{DD} \times 0.70$	V_{DD}	V
	V_{IH2}	Hysteresis input			$V_{DD} \times 0.75$		
	V_{IH3}		$V_{DD} < 4.5V$		$V_{DD} \times 0.90$		
Input Low Voltage	V_{IL1}	Except hysteresis input	$V_{DD} \geqq 4.5V$		0	$V_{DD} \times 0.30$	V
	V_{IL2}	Hysteresis input				$V_{DD} \times 0.25$	
	V_{IL3}		$V_{DD} < 4.5V$			$V_{DD} \times 0.10$	
Clock Frequency	fc	XIN, XOUT	VDD = 4.5 to 5.5V		0.4	8.0	MHz
	fs	XTIN, XTOUT			30.0	34.0	kHz

D.C. CHARACTERISTICS (V_{SS} = 0 V, Topr = – 30 to 70 °C)

PARAMETER	SYMBOL	PINS	CONDITIONS	Min.	Typ.	Max.	UNIT
Hysteresis Voltage	V_{HS}	Hysteresis input		–	0.9	–	V
Input Current	I_{IN1}	TEST	V_{DD} = 5.5 V, V_{IN} = 5.5 V/0 V	–	–	± 2	μA
	I_{IN2}	Open drain ports, Tri-state ports					
	I_{IN3}	$\overline{RESET}$, $\overline{STOP}$					
Input Resistance	R_{IN1}	Port P4 with pull down		30	70	150	kΩ
	R_{IN2}	$\overline{RESET}$		100	220	450	
Pull-down Resistance	R_K	Source open drain ports	V_{DD} = 5.5 V, V_{KK} = – 30 V	–	80	–	
Output Leakage Current	I_{LO1}	Sink open drain ports	V_{DD} = 5.5 V, V_{OUT} = 5.5 V	–	–	2	μA
	I_{LO2}	Source open drain ports	V_{DD} = 5.5 V, V_{OUT} = – 30 V	–	–	– 2	
	I_{LO3}	Tri-state ports	V_{DD} = 5.5 V, V_{OUT} = 5.5 V/0 V	–	–	± 2	
Output High Voltage	V_{OH2}	Tri-state ports	V_{DD} = 4.5 V, I_{OH} = – 0.7 mA	4.1	–	–	V
	V_{OH3}	P8, P9	V_{DD} = 4.5 V, I_{OH} = – 5 mA	2.4	–	–	
Output Low Voltage	V_{OL}	Except XOUT	V_{DD} = 4.5 V, I_{OL} = 1.6 mA	–	–	0.4	V
Output High current	I_{OH}	P6, P7	V_{DD} = 4.5 V, V_{OH} = 2.4 V	–	– 15	–	mA
Supply Current in NORMAL 1, 2 modes	I_{DD}		V_{DD} = 5.5 V, fc = 8 MHz, 87CM71/N71/P71	–	10.0	16.0	mA
			V_{DD} = 5.5 V, fc = 8 MHz, 87CS71	–	11.0	17.0	
Supply Current in IDLE 1, 2 modes			fs = 32.768 kHz, V_{IN} = 5.3V/0.2V	–	4.5	6.0	
Supply Current in SLOW mode			V_{DD} = 3.0 V, fs = 32.768 kHz, V_{IN} = 2.8 V/0.2 V	–	30	60	μA
Supply Current in SLEEP mode				–	15	30	
Supply Current in STOP mode			V_{DD} = 5.5 V, V_{IN} = 5.3 V/0.2 V	–	0.5	10	μA

Note 1 : Typical values show those at Topr = 25 °C , V_{DD} = 5 V.

Note 2 : Input Current I_{IN1},I_{IN3} ; The current through resistor is not included, when the input resistor (pull-up/pull-down) is contained.

Note 3 : Typical current consumption during A/D conversion is 1.2 mA.

A/D CONVERSION CHARACTERISTICS (V_{SS} = 0 V, V_{DD} = 2.7/4.5 to 5.5 V, Topr = – 30 to 70 °C)

PARAMETER	SYMBOL	PINS	CONDITIONS	Min.	Typ.	Max.	UNIT
Analog Input Voltage Range	V_{CIN}	CIN5 to CIN0		V_{SS}	–	V_{DD}	V
Conversion Error			V_{DD} = 5.0 V	–	–	± 1.5	LSB

A.C. CHARACTERISTICS (V_{SS} = 0 V, V_{DD} = 2.7/4.5 to 5.5 V, Topr = – 30 to 70 °C)

PARAMETER	SYMBOL	CONDITIONS	Min.	Typ.	Max.	UNIT
Machine Cycle Time	t_{cy}	In NORMAL1, 2 modes	0.5	–	10	μs
		In IDLE 1, 2 modes				
		In SLOW mode	117.6	–	133.3	
		In SLEEP mode				
High Level Clock Pulse Width	t_{WCH}	For external clock operation (XIN input), fc = 8 MHz	50	–	–	ns
Low Level Clock Pulse Width	t_{WCL}					
High Level Clock Pulse Width	t_{WSH}	For external clock operation (XTIN input), fs = 32.768 kHz	14.7	–	–	μs
Low Level Clock Pulse Width	t_{WSL}			–		

RECOMMENDED OSCILLATING CONDITIONS (V_{SS} = 0 V, V_{DD} = 2.7/4.5 to 5.5 V, Topr = – 30 to 70 °C)

PARAMETER	Oscillator	Oscillation Frequency	Recommended Oscillator		Recommended Constant	
					C_1	C_2
High-frequency Oscillation	Ceramic Resonator	8 MHz	KYOCERA	KBR8.0M	30 pF	30 pF
		4 MHz	KYOCERA	KBR4.0MS		
			MURATA	CSA 4.00MG		
	Crystal Oscillator	8 MHz	TOYOCOM	210B 8.0000	20 pF	20 pF
		4 MHz	TOYOCOM	204B 4.0000		
Low-frequency Oscillation	Crystal Oscillator	32.768 kHz	NDK	MX-38T	15 pF	15 pF

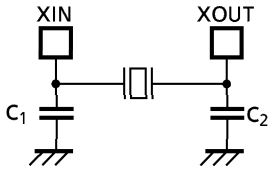

(1) High-frequency Oscillation

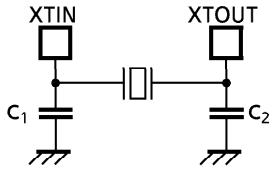

(2) Low-frequency Oscillation

Note : An electrical shield by metal shield plate on the surface of the IC package should be recommendable in order to prevent the device from the high electric fieldstress applied for continuous reliable operation.